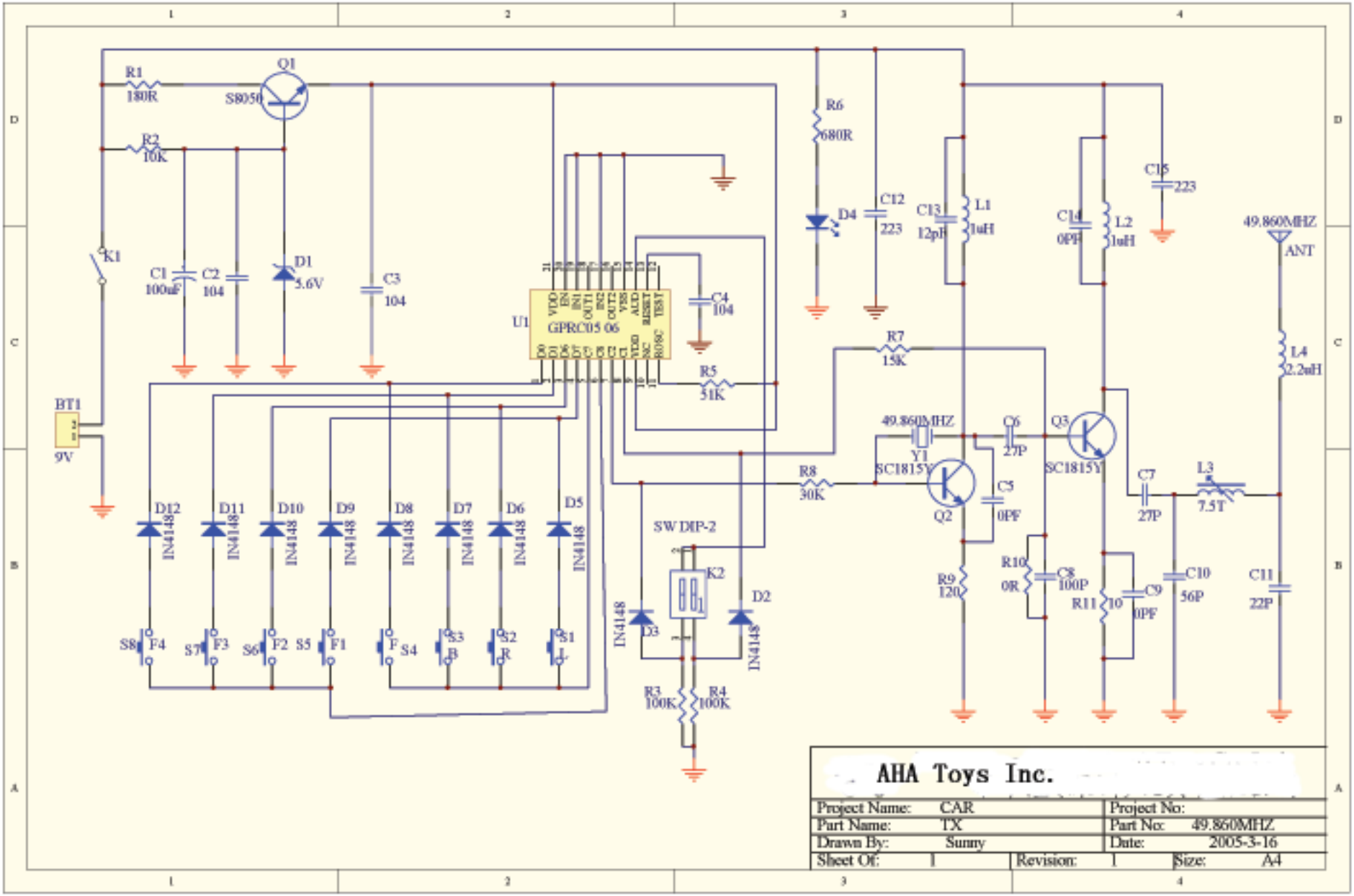

49.860MHZ TX CIRCUIT SCHEMATIC