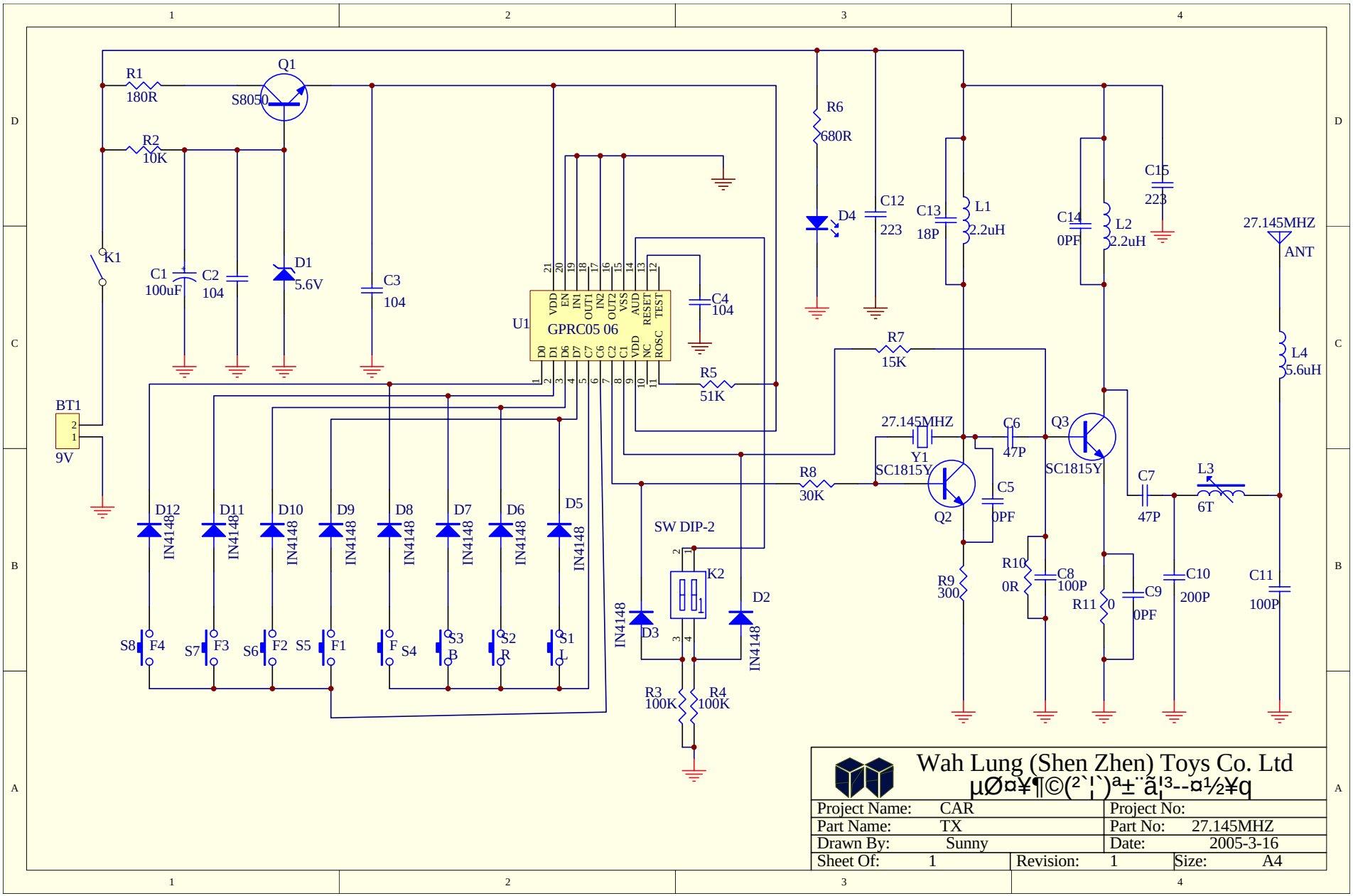

27.145MHZ TX SCHEMATIC