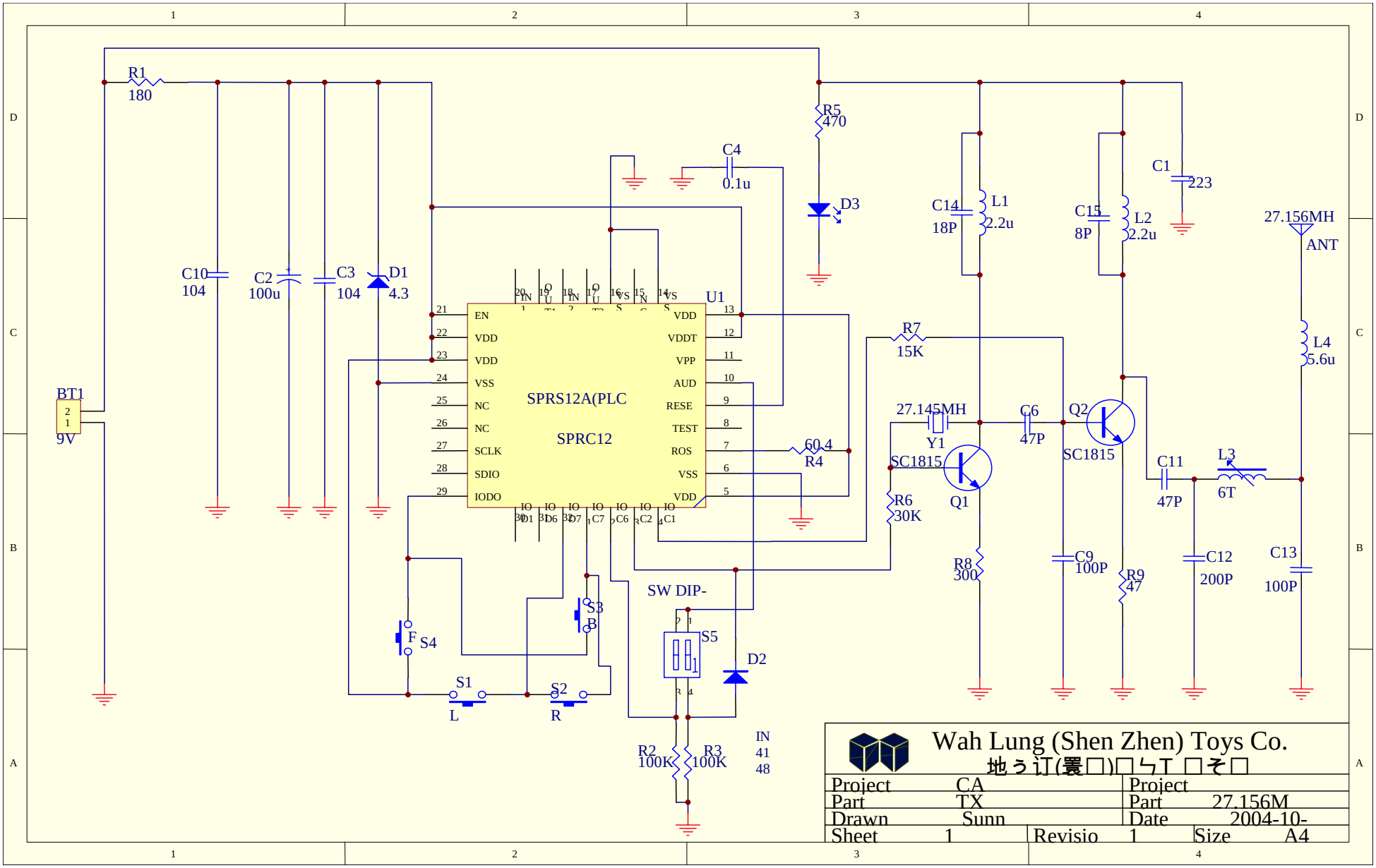


27.145MHZ TX Schematic