THE INFORMATION CONTAINED IN THIS DRAWING IS THE SOLE PROPERTY OF VISIONARY PRODUCTS INC. ANY REPRODUCTION IN PART OR WHOLE WITHOUT THE WRITTEN PERMISSION OF VISIONARY PRODUCTS INC. IS PROHIBITED. ALL RIGHTS RESERVED

Most Recent Revisions

REV	DESCRIPTION	ECO
03	See ECO V006357_02	V006357_02
04	See ECO V006357_03	V006357_03
05	See ECO V006357_04	V006357_04

Revision History

01: Initial Release.

02: Changes as follows per ECO V006357_01
1. Add +5VDC Voltage Regulator
2. Remove Toshiba Diodes, Replace with SP0505BAJT
3. Add Optional Level Translation Transistors
4. Change HSTR1 and HSTR2 Pull-ups to 100K
5. Correct Q8 PCB Pattern

03: Changes as follows per ECO V006357_02
1. Add four Power Resistors to +24VDC

04: Changes as follows per ECO V006357_03
1. Add FET switch to Paper Out Signal
2. Add bypass and bulk capacitance for EMI
3. Change Pullups on HSTR1 and HSTR2 from 100K to 47K

05: Changes as follows per ECO V006357_04
1. Change R6 from 3.92K to 9.09K

Specification	
PCB	V005434
BOM	V005436
RELATED DOCUMENTS	

UNLESS OTHERWISE SPECIFIED DIMENSIONS ARE IN MILLIMETERS [INCHES]
TOLERANCES ARE:
FRACTIONS DECIMALS ANGLES

MATERIAL

FINISH

DO NOT SCALE DRAWING

APPROVALS	DATE
DRAWN	
CHECKED	
COG ENG	
QA	
RELEASED	

Visionary Products Inc.
11814 S. Election Rd.
Draper, UT 84020
P: 801.495.2310 F: 801.495.2255

CompuSystems
Printer Interface
Revision History

SIZE C | DWG. NO. V005435 | REV. 05

SCALE NONE | SHEET 1 OF 3

THE INFORMATION CONTAINED IN THIS DRAWING IS THE SOLE PROPERTY OF VISIONARY PRODUCTS INC. ANY REPRODUCTION IN PART OR WHOLE WITHOUT THE WRITTEN PERMISSION OF VISIONARY PRODUCTS INC. IS PROHIBITED. ALL RIGHTS RESERVED

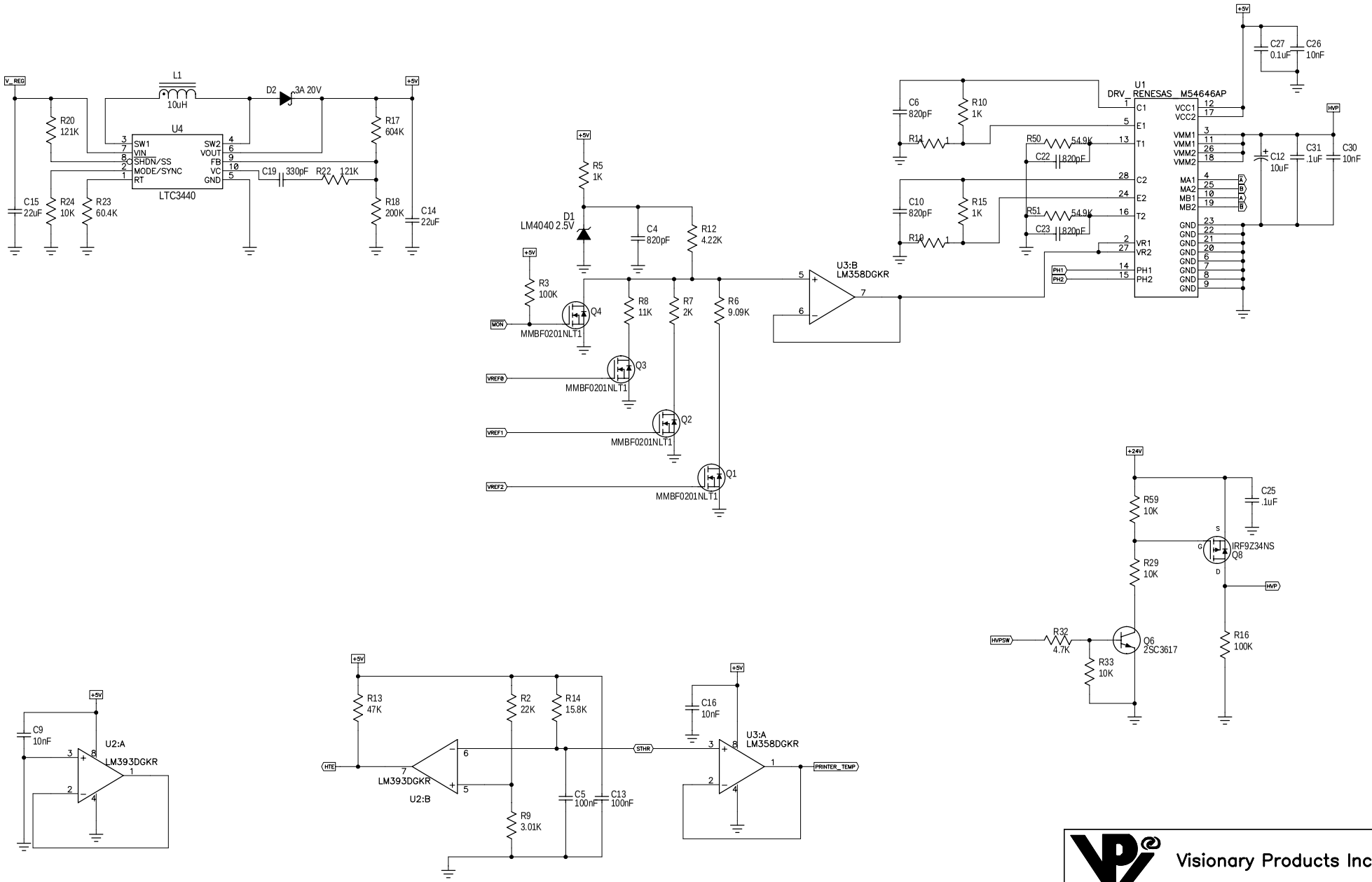

Visionary Products Inc.

CompuSystems
Printer Interface
Main

SIZE	DWG. NO.	REV.
A	V005435	05

DATE	SCALE	SHEET	OF
	NONE	2	3

THE INFORMATION CONTAINED IN THIS DRAWING IS THE SOLE PROPERTY OF VISIONARY PRODUCTS INC. ANY REPRODUCTION IN PART OR WHOLE WITHOUT THE WRITTEN PERMISSION OF VISIONARY PRODUCTS INC. IS PROHIBITED. ALL RIGHTS RESERVED

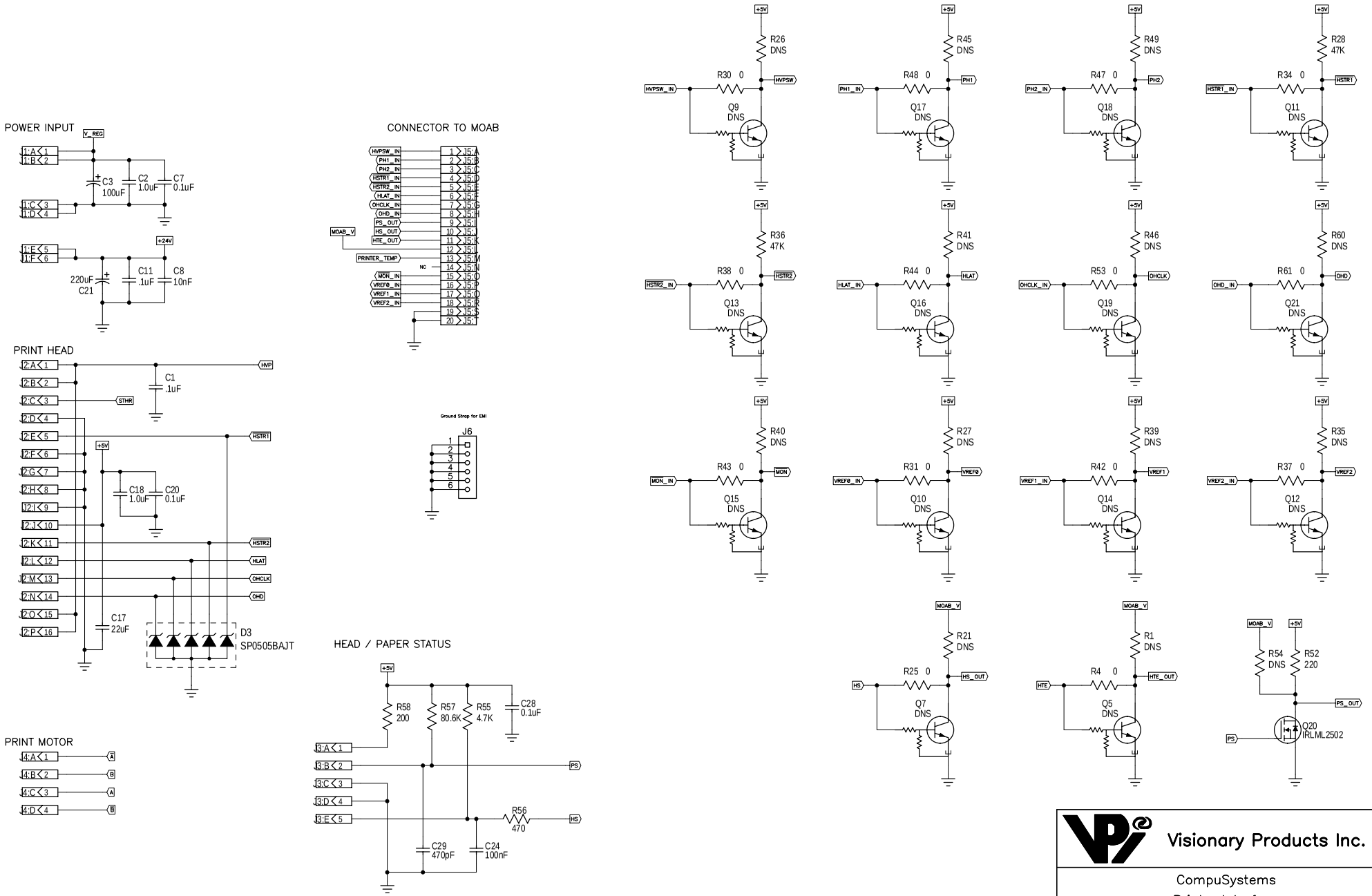

Visionary Products Inc.

CompuSystems
Printer Interface
Connectors

SIZE	DWG. NO.	REV.
A	V005435	05

DATE	SCALE	SHEET	OF
	NONE	3	3