Skywell Agency label :

1.Label artwork:

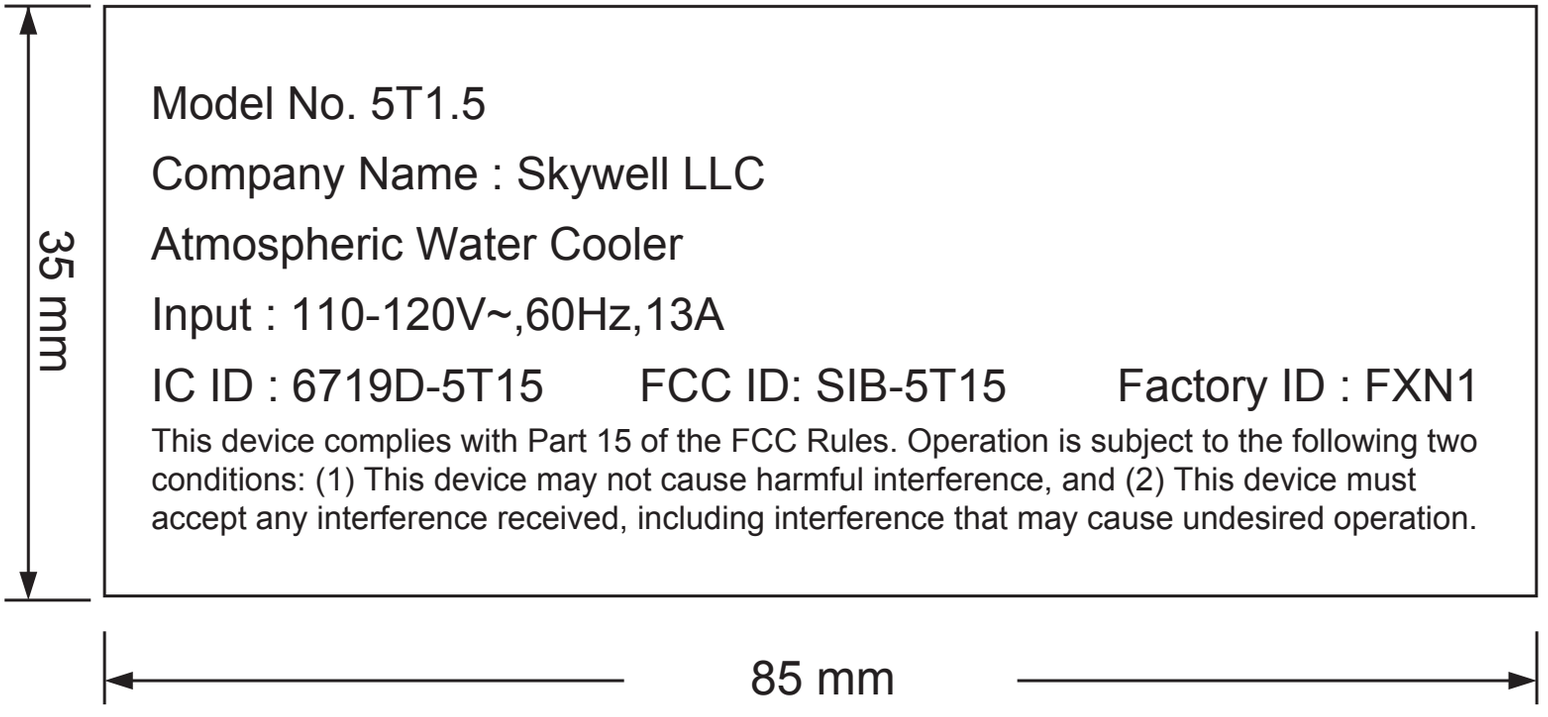

2.Print spec:

Note: Unless otherwise specified
1. Material: 80g artpaper
2. Adhesive base:Acrylic
3. Backround Color: White
   TXT Color: Black
4. Size: 85*35mm
5 Material must meet ROHS compliant
   ESD-A0RH-001H.
6. PN:3C015L600-HUR-G

Skywell Chassis label placement Rev01

Date:2016/1/5

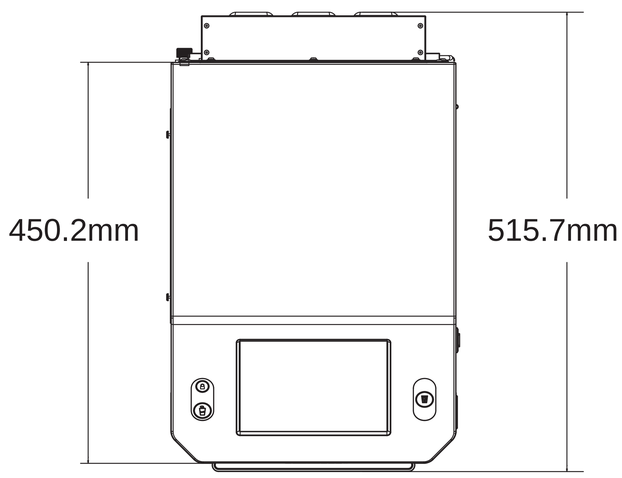

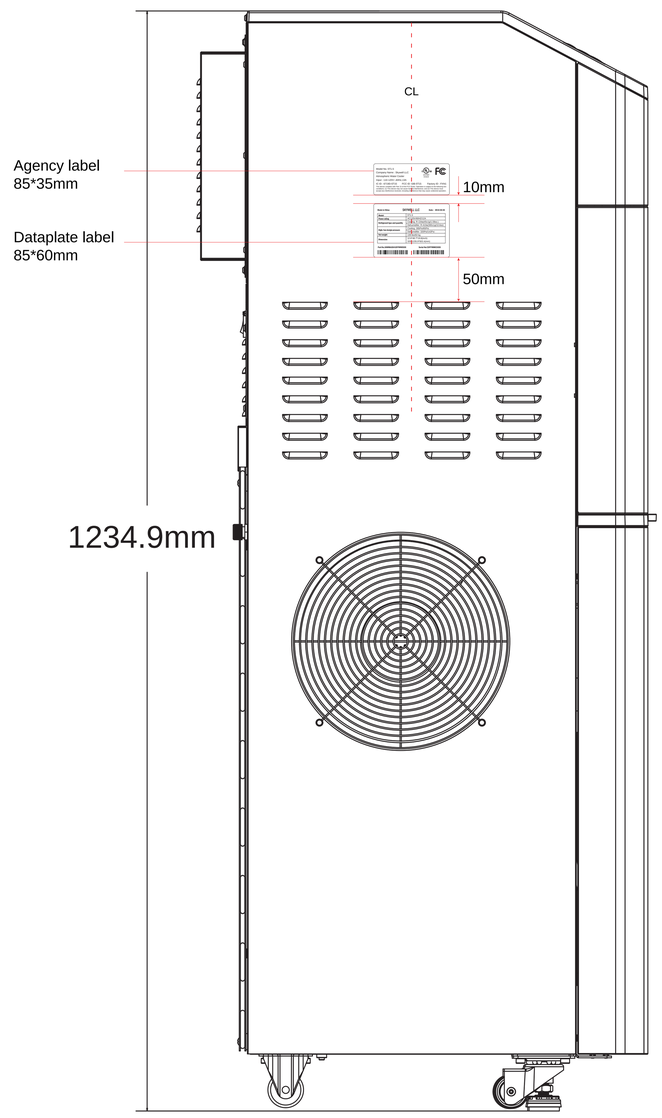

Left

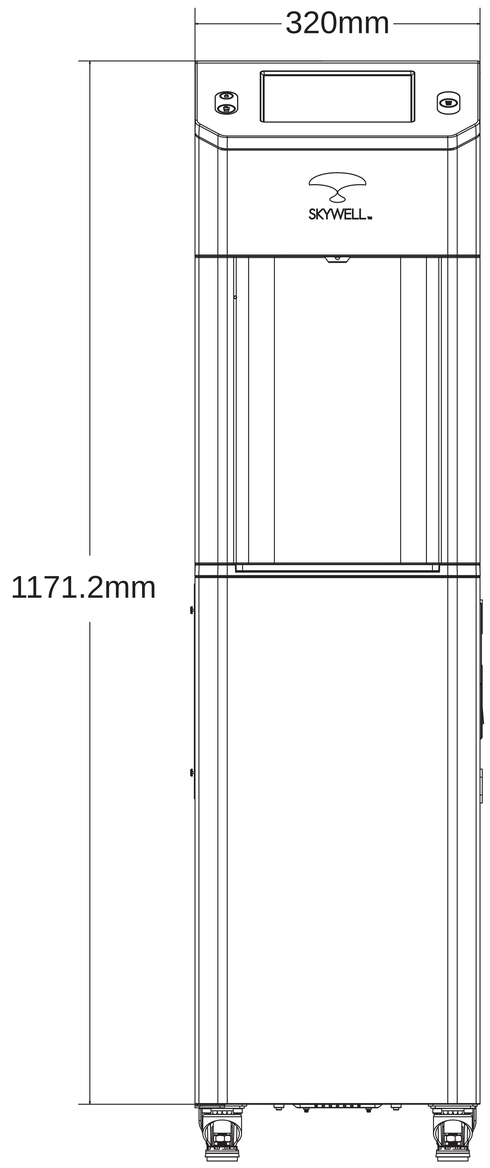

Front

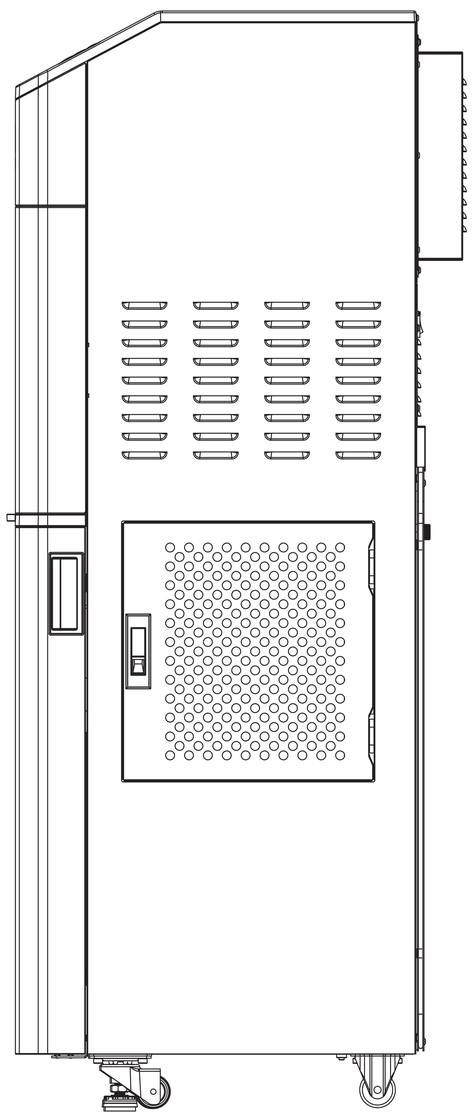

Right

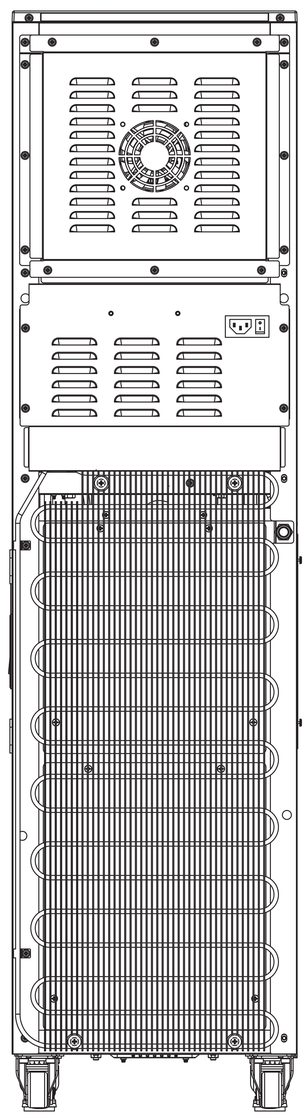

Back

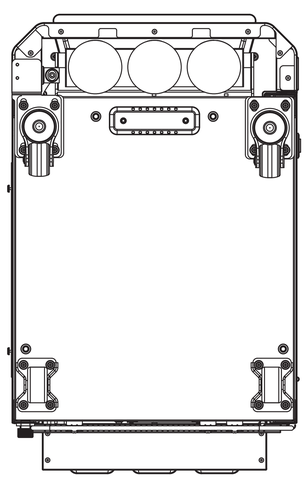

Bottom