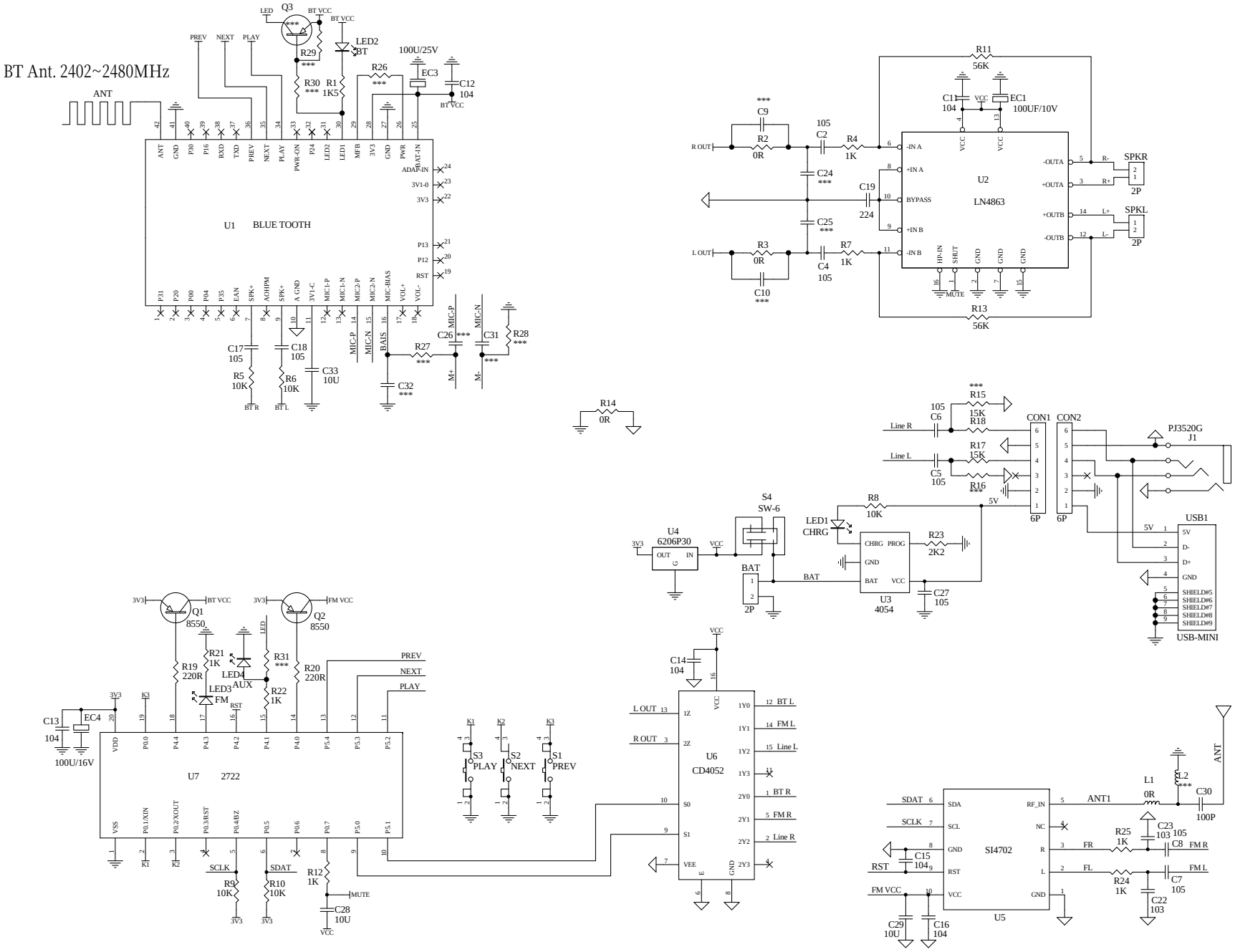
BT Ant. 2402~2480MHz
ANT
U1 BLUE TOOTH
Q3
LED2 BT
R29
R30
R1 1K5
R26
100U/25V
EC3
C12 104
BT VCC
PREV NEXT PLAY
C17 105
R5 10K
C18 105
R6 10K
C33 10U
C32
R27
C26
C31
R28
MIC-P
MIC-N
M+
M-
BT R
BT L
R14 0R
U2 LN4863
R11 56K
R13 56K
C1 104
EC1 100UF/10V
C9
R2 0R
C2 105
R4 1K
C24
C19 224
C25
R3 0R
C4 105
R7 1K
C10
R OUT
L OUT
SPKR 2P
SPKL 2P
R15 15K
R18
R17 15K
R16
C6 105
C5 105
Line R
Line L
CON1 6P
CON2 6P
PJ3520G J1
USB1
USB-MINI
U4 6206P30
S4 SW-6
BAT 2P
R8 10K
LED1 CHRG
R23 2K2
U3 4054
C27 105
Q1 8550
Q2 8550
R19 220R
R21 1K
LED4 AUX
LED3 FM
R31
R20 220R
R22 1K
PREV
NEXT
PLAY
C13 104
EC4 100U/16V
U7 2722
S3 PLAY
S2 NEXT
S1 PREV
R9 10K
R10 10K
R12 1K
C28 10U
MUTE
C14 104
U6 CD4052
BT L
FM L
Line L
BT R
FM R
Line R
SI4702 U5
SDAT
SCLK
RST
FM VCC
C15 104
C29 10U
C16 104
L1 0R
C30 100P
ANT1
R25 1K
C23 103
C8 105
R24 1K
C7 105
C22 103
FM R
FM L

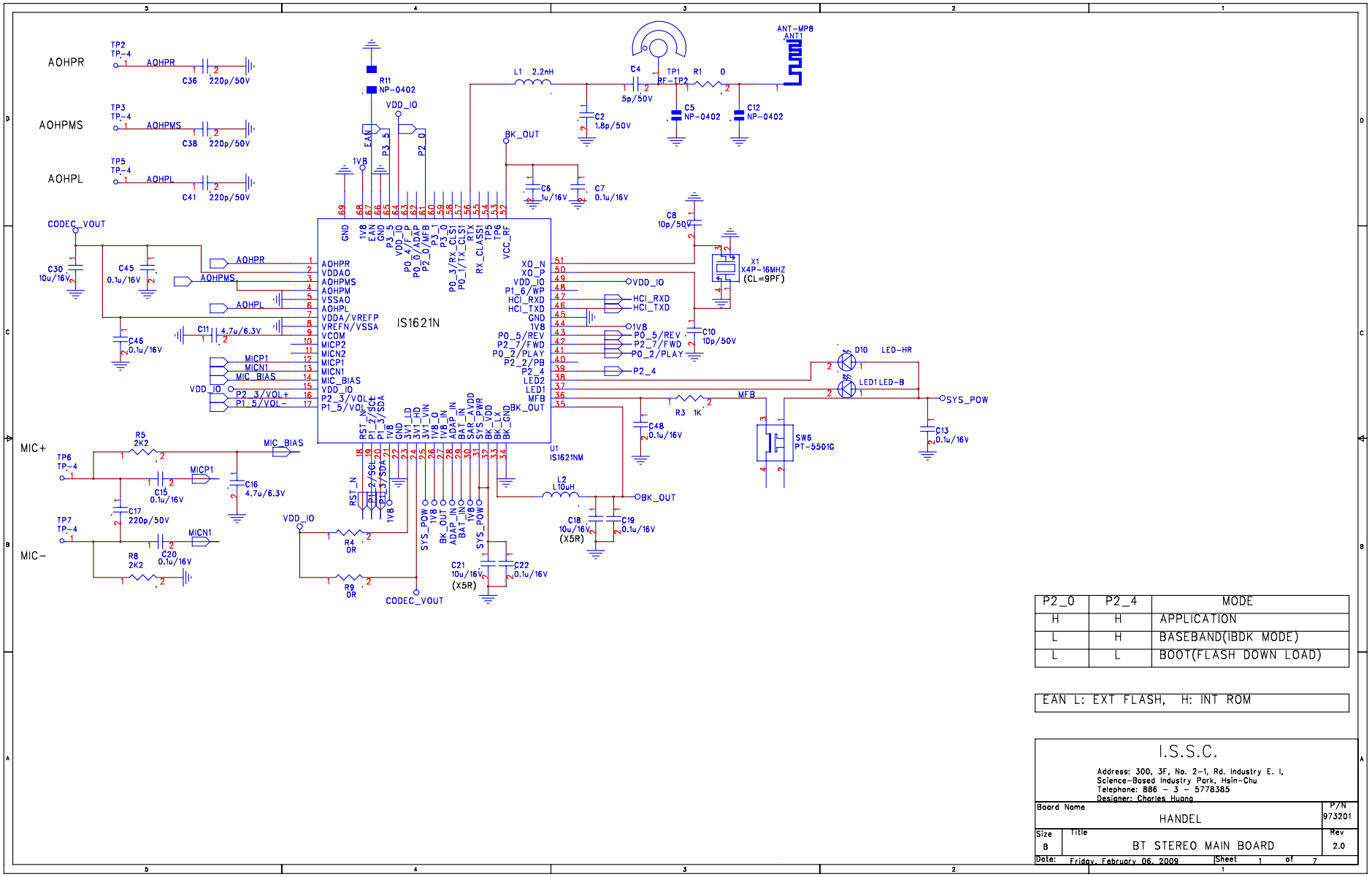

P2_0	P2_4	MODE
H	H	APPLICATION
L	H	BASEBAND(IBDK MODE)
L	L	BOOT(FLASH DOWN LOAD)

EAN L: EXT FLASH, H: INT ROM

I.S.S.C.
Address: 300, 3F, No. 2-1, Rd. Industry E. I,
Science-Based Industry Park, Hsin-Chu
Telephone: 886 - 3 - 5778385
Designer: Charles Huang

Board Name	P/N
HANDEL	973201

Size	Title	Rev
B	BT STEREO MAIN BOARD	2.0

Date: Friday, February 06, 2009 Sheet 1 of 7