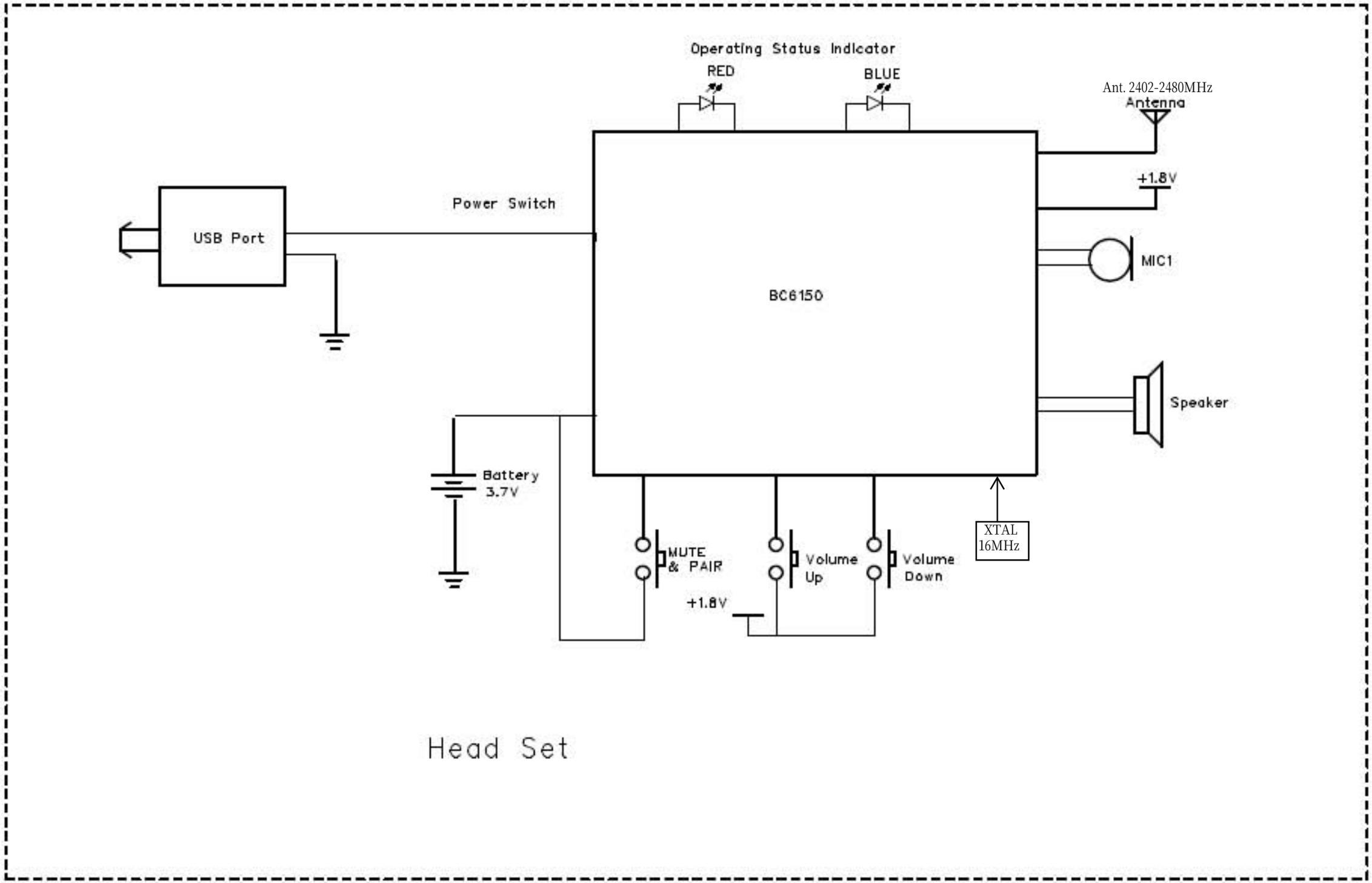
Operating Status Indicator
RED
BLUE
Ant. 2402-2480MHz
Antenna
+1.8V
Power Switch
USB Port
MIC1
BC6150
Speaker
Battery
3.7V
XTAL
16MHz
MUTE
& PAIR
Volume
Up
Volume
Down
+1.8V
Head Set