2210 O'Toole Ave. #200, San Jose, Ca. 95131
Tel: 408-576-1770 Fax: 408-576-1790

Advance Information for:
BTM02C2XX-X
Windigo Class 2 Bluetooth™ Module Series

June 27, 2002

Quality and Qualified Bluetooth Product

Windigo Confidential

2210 O'Toole Ave #200
San Jose, CA 95131

TEL: 408.576.1770
FAX: 408.576.1790

info@windigosys.com
http://www.windigosys.com/

©Copyright Windigo Systems Inc. 2002
info@windigosys.com http://www.windigosys.com/
This material may not in whole or part be copied, or communicated to third parties without Windigo's prior agreement in writing.

2210 O'Toole Ave. #200, San Jose, Ca. 95131
Tel: 408-576-1770 Fax: 408-576-1790

Product Overview

The Windigo Universal Class 2 Bluetooth™ Module **BTM02C2XX-X series** are compact and qualified modules, which is surface mountable, that provide a complete 2.4GHz Bluetooth system for data and voice communications, these modules can be integrated into almost any electrical device, providing the OEM with an affordable and relatively simple method of enabling their products with Bluetooth technology.

Features

- BQB qualified
- CSR Bluecore2 based design, 0.18um CMOS technology
- Compliant with Bluetooth V1.1 specification
- Fully Class 2 operation
- Small form factor (14.5mm x 25mm x 2.2mm)
- Built-in link controller, link manager protocol and flash
- Support up to 7 ACL connections, and 3 SCO connections
- 13 bit PCM interface
- UART interface with programmable baud rate
- Full speed USB interface, compliant with USB 1.1
- PIO control
- Full Bluetooth data rate over UART and USB
- Surface mountable
- Wide range power supply, 3.0V to 3.3V
- Full low power modes
  - Park, Sniff, Hold and Deep Sleep

Windigo Confidential

Applications

Windigo universal class 2 Bluetooth modules BTM02C2XX-X series can be used in various products, like:

- Mobile phone
- PDA, Handheld PC
- Desktop PC
- Notebook PC
- Digital camera
- Printer
- Card reader
- USB/RS232 adaptor
- Bluetooth Headset
- Security tag
- And many other computer peripherals or embedded applications

BQB

This production line is fully Bluetooth Version 1.1 qualified and listed on www.bluetooth.com

Partners

Extended Systems, Inc., Cambridge Silicon Radio and GigaAnt

©Copyright Windigo Systems Inc. 2002
info@windigosys.com http://www.windigosys.com/
This material may not in whole or part be copied, or communicated to third parties without Windigo's prior agreement in writing.

2210 O'Toole Ave. #200, San Jose, Ca. 95131
Tel: 408-576-1770 Fax: 408-576-1790

Available Solutions

Partner with Extended System and CSR, immediately available solutions based on this module and other Windigo Bluetooth modules include:

- Bluetooth headset
- Bluetooth USB dongle for PC and notebook with Windows 98, Windows ME, Windows 2000 and Windows XP driver support and application support
- Bluetooth dongle for PDAs with Windows CE 3.0 driver support and application support
- Bluetooth CompactFlash Card, PCMCIA Card
- RS232 dongle
- PS/2 dongle
- Others

Quick Selection Guide

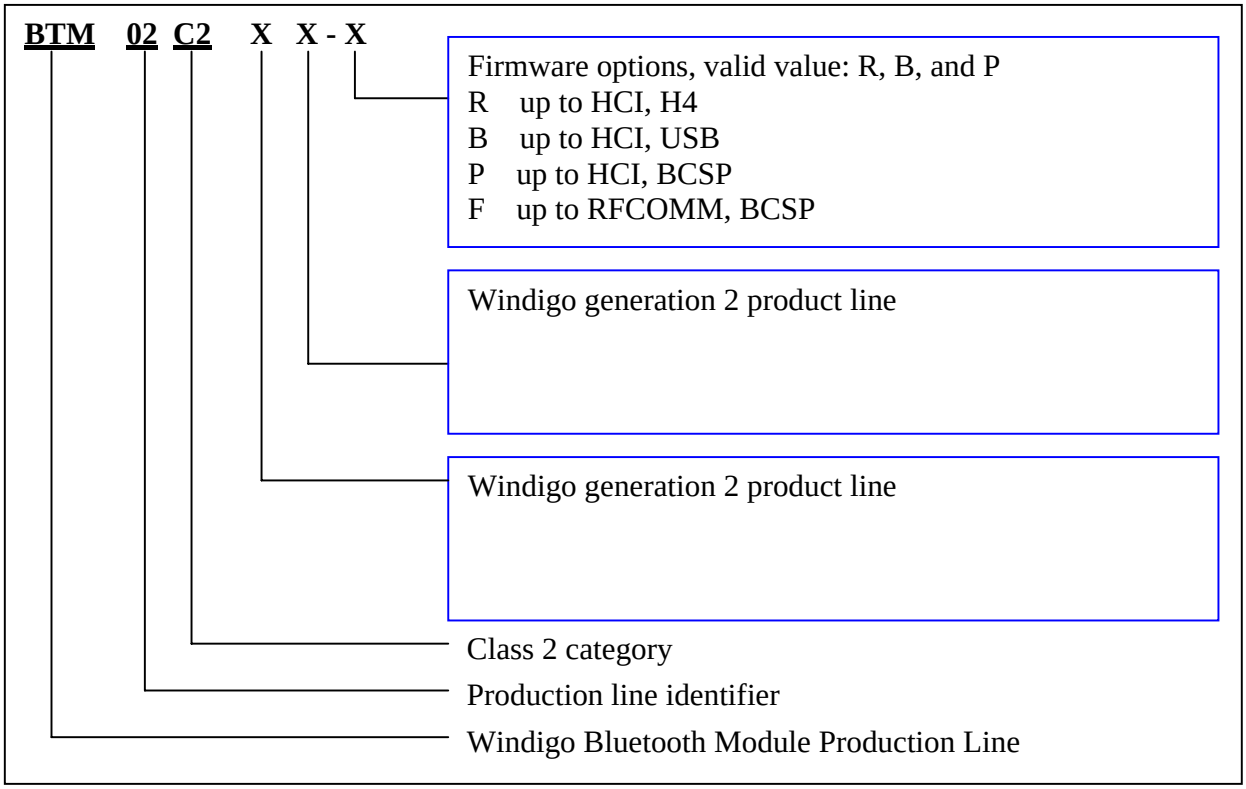

©Copyright Windigo Systems Inc. 2002
info@windigosys.com http://www.windigosys.com/
This material may not in whole or part be copied, or communicated to third parties without Windigo's prior agreement in writing.

2210 O'Toole Ave. #200, San Jose, Ca. 95131
Tel: 408-576-1770 Fax: 408-576-1790

Functional Diagram

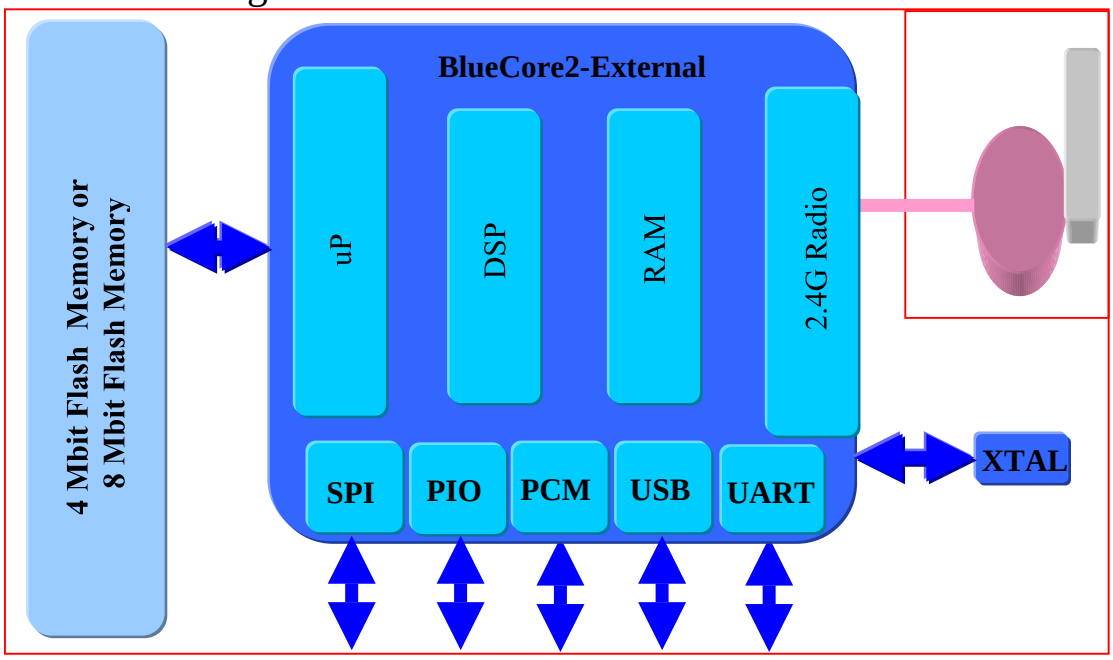

Module Snapshot

Figure 1 illustrates the snap shot for one valid option **BTM02C2XX-X.**

Windi dential

Figure 1. BTM02C2XX-X snap shot

©Copyright Windigo Systems Inc. 2002
info@windigosys.com http://www.windigosys.com/
This material may not in whole or part be copied, or communicated to third parties without Windigo's prior agreement in writing.

2210 O'Toole Ave. #200, San Jose, Ca. 95131
Tel: 408-576-1770 Fax: 408-576-1790

Current Consumptions

Test conditions: VDD = 3.0V, Temperature =20°C, Output power = 0 dBm

Mode	Average	Peak	Unit
SCO connection HV3 (1s interval sniff mode) (Slave)	28	-	mA
SCO connection HV3 (1s interval sniff mode) (Master)	28	-	mA
SCO connection HV1 (Slave)	53	-	mA
SCO connection HV1 (Master)	53	-	mA
ACL data transfer 115.2kbps UART (Master)	15	-	mA
ACL data transfer 720kbps USB (Slave)	61	-	mA
ACL data transfer 720kbps USB (Master)	61	-	mA
ACL connection, Sniff Mode 40ms interval, 38.4kbps UART	4	-	mA
ACL connection, Sniff Mode 1.28s interval, 38.4kbps UART	0.5	-	mA
Parked Slave, 1.28s beacon interval, 38.4kbps, UART	0.6		mA
Deep Sleep Mode	15	-	uA
Peak current during RF burst	80	-	mA

Electrical Characteristics

Absolute Maximum Ratings		
Rating	**Min**	**Max**
Storage Temperature	- 40 °C	+105 °C
Supply Voltage VCC (3V3)	-0.4 V	3.6 V

Recommended Operating Conditions		
Operation Condition	**Min**	**Max**
Operation Temperature range	- 40 °C	+105 °C
Supply Voltage VCC (3V3)	3.0 V	3.3 V

Windigo Confidential

Input / Output Terminal Characteristics				
Digital Terminals	**Min**	**Typ**	**Max**	**Unit**
Input Voltage, logic low	-0.4	-	+0.8	V
Input Voltage, logic High	0.7*VCC	-	VCC+0.4	V
Output voltage, logic low	-	-	0.2	V
Output voltage, logic high	VCC-0.2	-	-	V
Tri-state leakage current	-1	-	+0.5	uA

Radio Characteristics for 20°C

Test conditions: VDD = 3.0V Frequency = 2.441GHz

Receiver	Min	Typical	Max	Bluetooth Specification	Unit
Sensitivity at 0.1% BER (1)	-	-83		≤-70	dBm
Maximum received signal (1)	-	-5.0	-	≥-20	dBm
C/I Co-channel (1)	-	9	-	≤11	dB
Adjacent channel selectivity C/I 1MHz (1)	-	-2.0	-	≤0	dB
2nd adjacent channel selectivity C/I 2MHz (1)	-	-34	-	≤-30	dB
3rd adjacent channel selectivity C/I >3MHz (1) (2)	-	-43	-	≤-40	dB
Image rejection C/I (1) (3)	-	-11	-	≤-9	dB

©Copyright Windigo Systems Inc. 2002
info@windigosys.com http://www.windigosys.com/
This material may not in whole or part be copied, or communicated to third parties without Windigo's prior agreement in writing.

2210 O'Toole Ave. #200, San Jose, Ca. 95131
Tel: 408-576-1770 Fax: 408-576-1790

Transmitter	Min	Typical	Max	Bluetooth Specification	Unit
Maximum RF transmit power (1)	-	4	-	-6 to +4	dBm
RF power control range (1)	-	30	-	≥16	dB
RF power range control resolution		2.0	-	-	dB
20dB bandwidth for modulated carrier	-	885	-	≤1000	kHz
2nd adjacent channel transmit power (1) (±2MHz)	-	-52	-	≤-20	dBm
3rd adjacent channel transmit power (1) (±3MHz)	-	-57	-	≤-40)	dBm

Notes:
(1) Measured according to the Bluetooth specification
(2) Up to five spurious responses within Bluetooth limits are allowed
(3) At carrier -3MHz

Windigo Confidential

©Copyright Windigo Systems Inc. 2002
info@windigosys.com http://www.windigosys.com/
This material may not in whole or part be copied, or communicated to third parties without Windigo's prior agreement in writing.

2210 O'Toole Ave. #200, San Jose, Ca. 95131
Tel: 408-576-1770 Fax: 408-576-1790

Module Pin out Definitions and dimension

Figure 2 shows the **BTM02C2XX** module dimensions, and Figure 3 shows its physical dimensions.

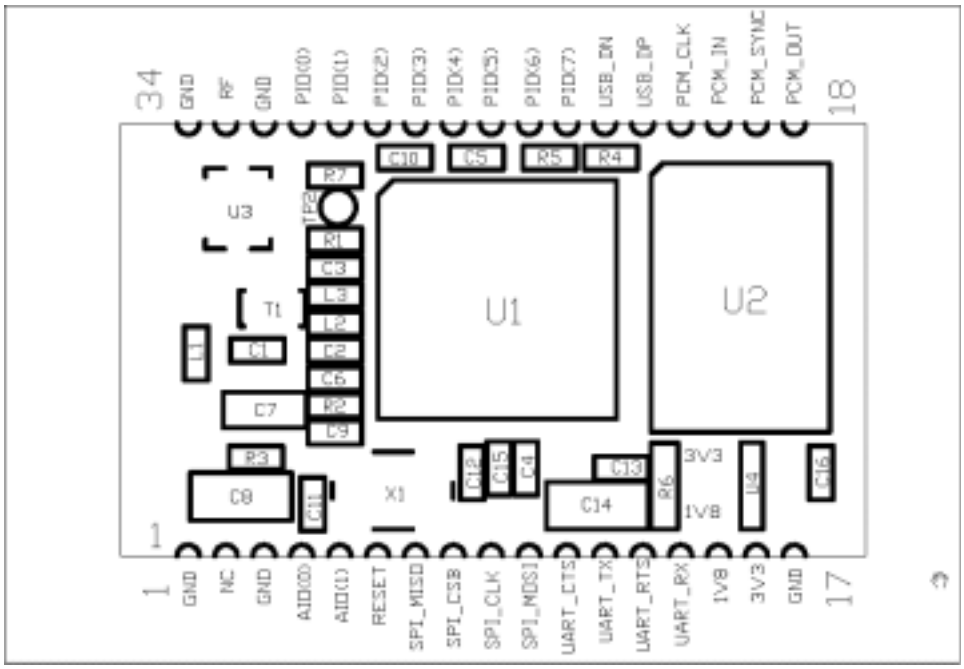

Figure 2. BTM02C2XX pin out definitions
(Components Side View)

Windigo Confidential

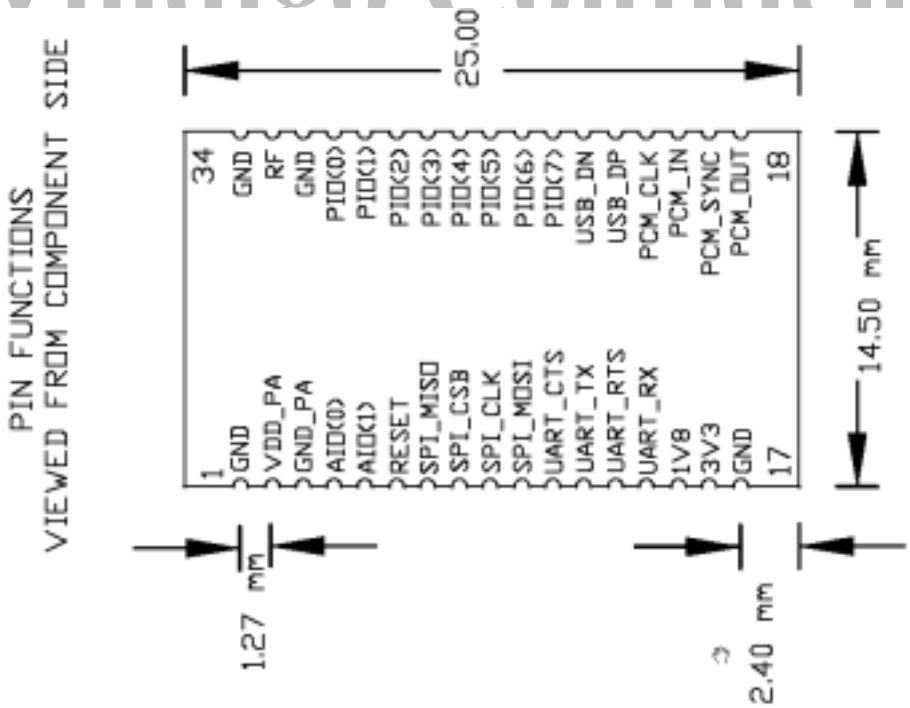

Figure 3. Module's dimension

©Copyright Windigo Systems Inc. 2002
info@windigosys.com http://www.windigosys.com/
This material may not in whole or part be copied, or communicated to third parties without Windigo's prior agreement in writing.

2210 O'Toole Ave. #200, San Jose, Ca. 95131
Tel: 408-576-1770 Fax: 408-576-1790

Module Layout Guideline

Figure 4 is the recommended layout footprint for **BTM02C2XX** module

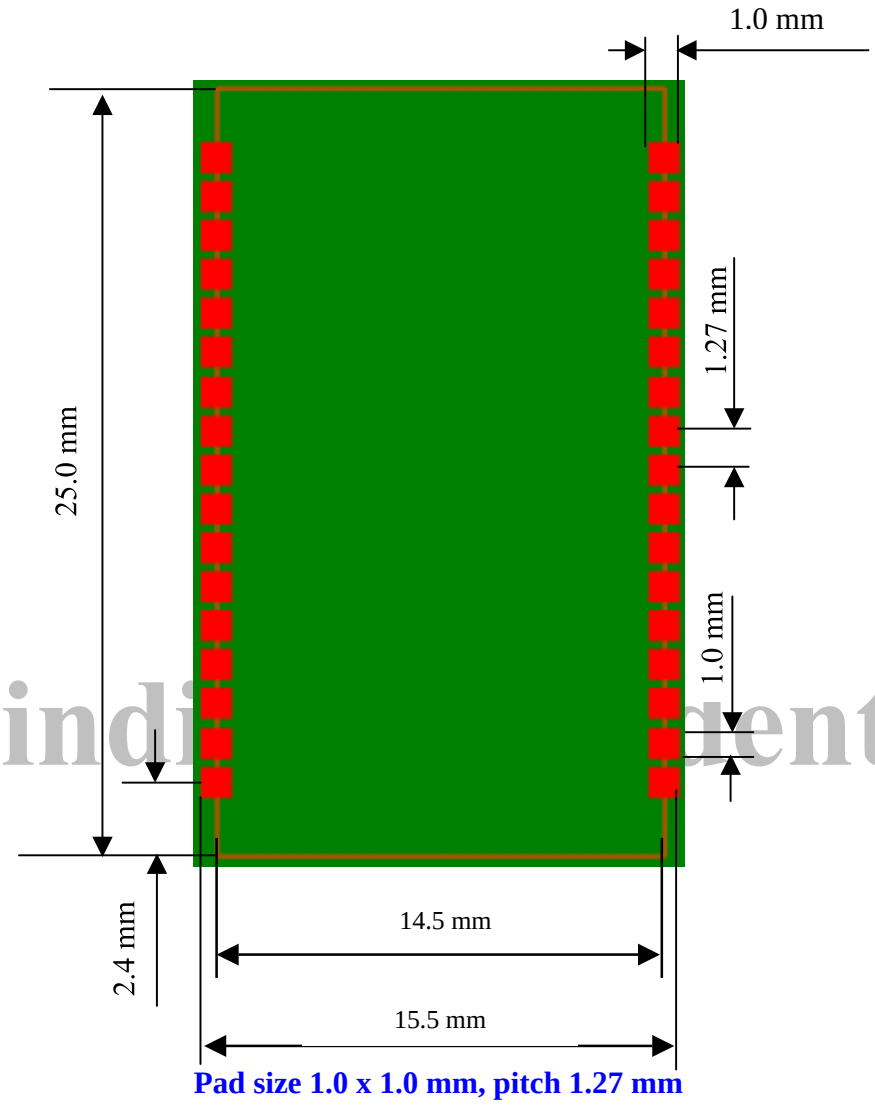

Windi dential

Figure 4. BTM02C2XX-X layout footprint recommendation

©Copyright Windigo Systems Inc. 2002
info@windigosys.com http://www.windigosys.com/
This material may not in whole or part be copied, or communicated to third parties without Windigo's prior agreement in writing.

2210 O'Toole Ave. #200, San Jose, Ca. 95131
Tel: 408-576-1770 Fax: 408-576-1790

Table 1. Pin definitions

Pin No.	Pin Name	Pin Type	Descriptions
1	GND	Ground	Power supply, negative input
2	VDD_PA	NC	Leave this pin unconnected, this pin is reserved for Windigo internal use
3	GND	Gournd	Power Supply, negative input
4	AIO(0)	Bi-Directional	Programmable I/O port, leave this pin un-connected when not used
5	AIO(1)	Bi-Directional	Programmable I/O port, leave this pin un-connected when not used
Testing and Debug			
6	REESET	CMOS input with weak internal pull down	Active high
7	SPI_MISO	CMOS output, tri-statable with weak internal pull down	Synchronous serial interface data output, used for debugging / firmware downloading only
8	SPI_CSB	CMOS input with weak internal pull up	Chip select for synchronous serial interface, used for debugging / firmware downloading only
9	SPI_CLK	COMS input with weak internal pull down	Synchronous serial interface clock, used for debugging / firmware downloading only
10	SPI_MOSI	CMOS output, tri-statable with weak internal pull down	Synchronous serial interface data input, used for debugging / firmware downloading only
UART interface			
11	UART_CTS	CMOS input with weak internal pull down	UART clear to send, pull high if UART interface is not used,
12	UART_TX	CMOS output	UART data output
13	UART_RTS	CMOS output, tri-statable with weak internal pull up	UART ready to send
14	UART_RX	CMOS input with weak internal pull down	UART data input
Power Supply			
15	1V8	Output	Leave this pin unconnected
16	3V3	Power supply	Power supply positive input
17	GND	Ground	Power supply negative input
PCM interface			
18	PCM_OUT	CMOS output, tri-statable with weak internal pull down	Synchronous data output
19	PCM_SYNC	Bi-Directional	Synchronous data strobe
20	PCM_IN	CMOS input with weak internal Pull down	Synchronous data in
21	PCM_CLK	Bi-Directional with weak internal pull down	Synchronous data clock
USB Interface			
22	USB_DP	Bi-Directional	USB data plus
23	USB_DN	Bi-Directional	USB data minus

Windigo Confidential

©Copyright Windigo Systems Inc. 2002
info@windigosys.com http://www.windigosys.com/
This material may not in whole or part be copied, or communicated to third parties without Windigo's prior agreement in writing.

2210 O'Toole Ave. #200, San Jose, Ca. 95131
Tel: 408-576-1770 Fax: 408-576-1790

PIO interface			
24	PIO(7)	Bi-Directional with programmable weak internal pull down/pull high	Programmable input/output line, leave this pin un-connected when not used
25	PIO(6)	Bi-Directional with programmable weak internal pull down/pull high	Programmable input/output line, leave this pin un-connected when not used
26	PIO(5)	Bi-Directional with programmable weak internal pull down/pull high	Programmable input/output line, leave this pin un-connected when not used
27	PIO(4)	Bi-Directional with programmable weak internal pull down/pull high	Programmable input/output line, leave this pin un-connected when not used
28	PIO(3)	Bi-Directional with programmable weak internal pull down/pull high	Programmable input/output line, leave this pin un-connected when not used
29	PIO(2)	Bi-Directional with programmable weak internal pull down/pull high	Programmable input/output line, leave this pin un-connected when not used
30	PIO(1)	Bi-Directional with programmable weak internal pull down/pull high	Programmable input/output line, leave this pin un-connected when not used
31	PIO(0)	Bi-Directional with programmable weak internal pull down/pull high	Programmable input/output line, leave this pin un-connected when not used
RF interface			
32	GND	Ground	Power supply, negative input
33	RF	Bi-Directional	RF feed point, 50 ohm
34	GND	Ground	Power supply, negative input

Windigo Confidential

©Copyright Windigo Systems Inc. 2002
info@windigosys.com http://www.windigosys.com/
This material may not in whole or part be copied, or communicated to third parties without Windigo's prior agreement in writing.

2210 O'Toole Ave. #200, San Jose, Ca. 95131
Tel: 408-576-1770 Fax: 408-576-1790

Appendix A

BTM02C2XX-X Module Power Supply Requirements

1 Introduction

As a matter of facts, CSR's Bluecore2-external chip used on BTM02C2XX-X module operates at 1.8V, and the memory device used on BTM02C2XX-X operates at 3.3V. Due to the difference of these separate power supply inputs, the power supply on 3V3 pin is very critical, especially when the module is used in battery-powered device. In order to avoid malfunction potentially, this application note is provided to be used as an guideline on power supply design for these applications.

2 BTM02C2XX-X Power Distributions

As shown in figure A1, power supply on BTM02C2XX-X is portioned into two:

1. 1.8V
2. 3.3V

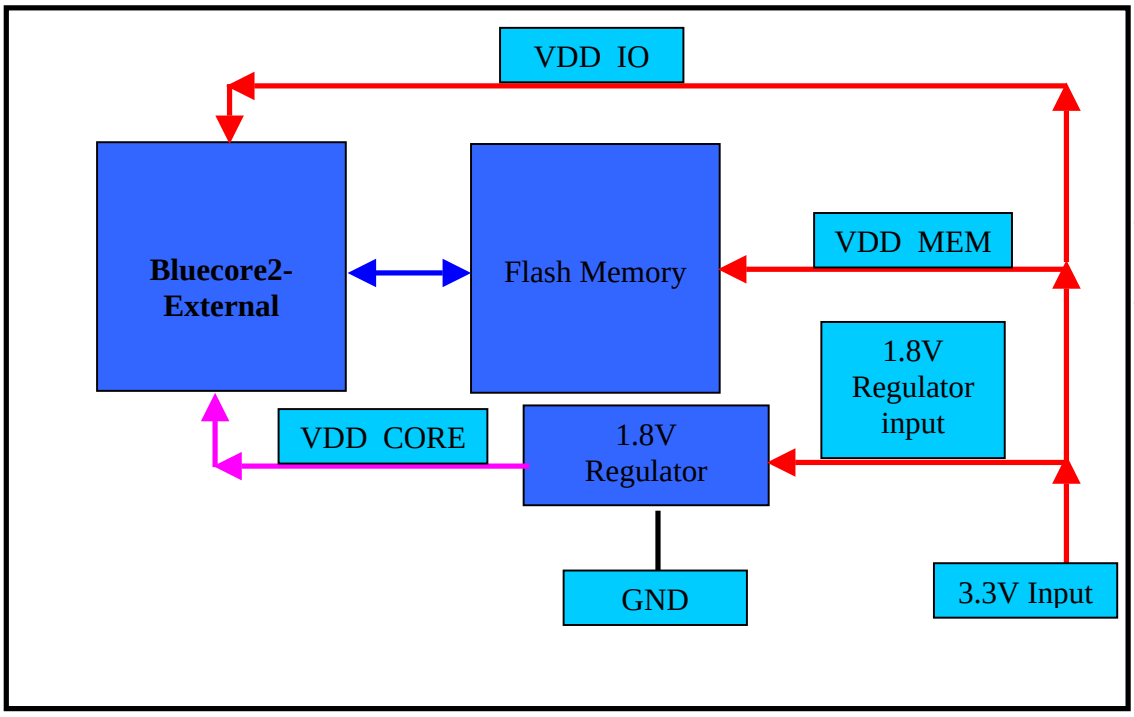

Figure A1. BTM02C2XX-X power distributions

Typical Application Scenario

A typical application circuit may regulate an external, higher voltage (e.g., 5.0V) down to 3.3V to supply the BTM02C2XX-X module. Figure A2 shows this arrangement. The 3.3V is further regulated down to 1.8V by on board regulator to supply the other pins of BlueCore-2 External.

©Copyright Windigo Systems Inc. 2002
info@windigosys.com http://www.windigosys.com/
This material may not in whole or part be copied, or communicated to third parties without Windigo's prior agreement in writing.

2210 O'Toole Ave. #200, San Jose, Ca. 95131
Tel: 408-576-1770 Fax: 408-576-1790

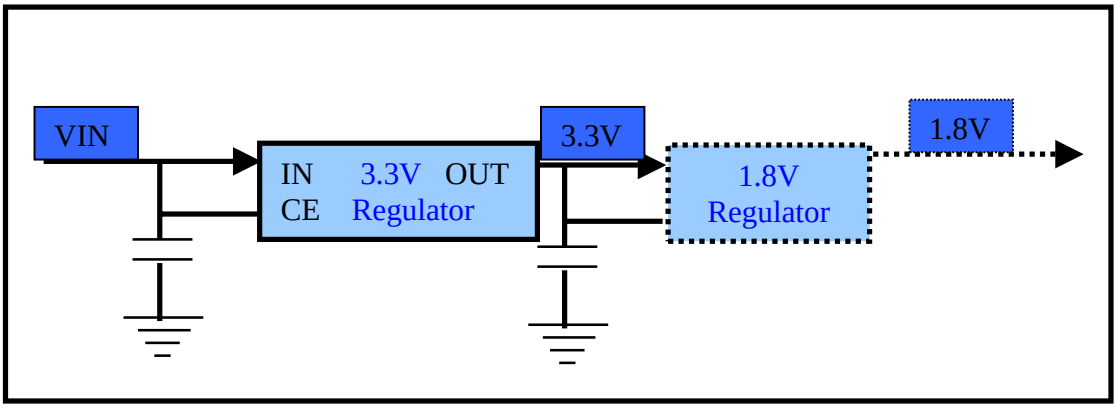

Figure A2. Typical Application Scenario

At switch on, the output of the 3.3V regulator rises in voltage, the output of 1.8V regulator rises in sympathy. So ideally when Bluecore2 is ready to run, the external flash memory is stable enough, everything goes correctly. But when the application is powered by battery, such a hazard will occur under bellow situation: Battery voltage VIN drop to bellow 3.0V, but above 2.8V for examples, so 3.3V regulator output will bellow 3.0V, but 1.8V regulator still can output 1.8V, so Bluecore2-external can not access the flash memory correctly, firmware will panic.

A solution is one more voltage detector is added for these critical application as shown in figure A3.

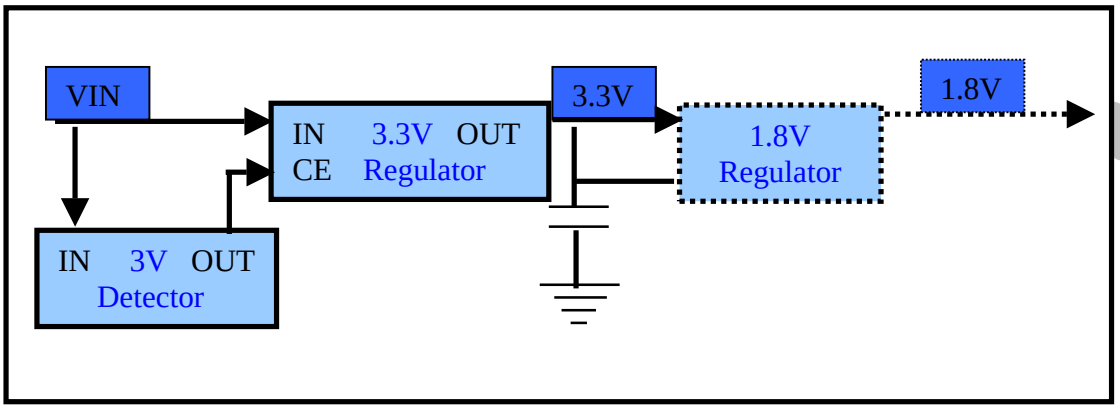

Figure A3. Solution for Battery Powered Device

©Copyright Windigo Systems Inc. 2002
info@windigosys.com http://www.windigosys.com/
This material may not in whole or part be copied, or communicated to third parties without Windigo's prior agreement in writing.

1 Sep, 2003

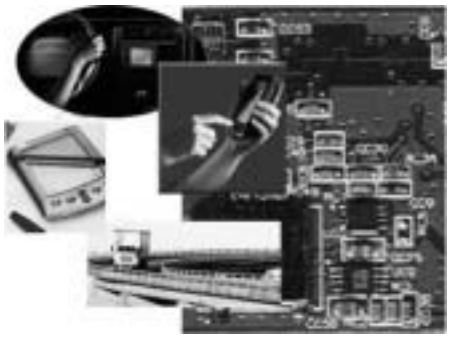

FGPXMO161/FGPXMO041

GPS Receiver Modules

GENERAL DESCRIPTION

The FGPXMO161 & FGPXMO041 GPS Receiver Modules are GPS receiver that feature ultra low power architecture. These fully autonomous receivers provide high position and speed accuracy performances as well as high sensitivity and tracking capabilities in urban conditions. The solutions enable small form factor devices. The FGPXMO161 & FGPXMO041 deliver major advancements in GPS performances, accuracy, integration, computing power and flexibility. They are designed to simplify the embedded system integration process.

These modules are based on the XEMICS' XE1610 Ultra Low Power GPS chipset.

APPLICATIONS

- Car navigation
- Fleet management/tracking
- Palmtop, Laptop, PDA, and Handheld
- Location Based Services enabled devices
- Personal Handheld receivers

KEY FEATURES

- High sensitivity: to -143 dBm tracking, superior urban performances
- Position accuracy: < 5m CEP (50%) without SA (horizontal)
- Warm Start is under 32 seconds (50%)
- Hot Start is under 12 seconds (50%)
- Ultra low power: 19mA(avg.) @ 3.3V full power (vers. 2.2), 3 additional low power modes
- Embedded ARM7TDMI
- Small form factor and low cost solution
- Ready-to-plug solution, fully autonomous PVT solution. Easily integrated into existing systems
- On-board RAM for GPS navigation data, on-board Flash memory back-up
- PPS output
- Bidirectional NMEA interface
- Real Time Clock with separate back-up power supply

REFERENCE

FGPXMO041 – 4MB Flash option
FGPXMO161 – 16MB Flash option

Specifications subject to change without prior notice

ftech corporation
16 Nan-ke 9th RD. Science-based Industrial Park, Tainan 741, Tawian, R.O.C.
TEL : +886-600-8999 FAX : +886-6-505-0826
E-mail : sales@f-tech.com.tw Web-site : www.f-tech.com.tw

Table of Content

GENERAL DESCRIPTION 1
APPLICATIONS 1
KEY FEATURES 1
REFERENCE 1
ARCHITECTURE HIGHLIGHTS 3
Industry Leading GPS Performance 3
Low Power 3
FGPXMO161 & FGPXMO041 Receiver Highlights 3
FUNCTIONAL BLOCK DIAGRAM 3
PIN DESCRIPTION 4
TECHNICAL CHARACTERISTICS 4
Specifications 4
Physical Characteristics 5
Proposed Mechanical Interface 5
RF Interface Connector 5
Data Interface Connector 5
INTERFACE DEFINITION, PRINCIPLES OF OPERATION 5
Data Interface 5
Operating Modes 6
NMEA Standard Message Set Specification 7
NMEA Standard Sentences 7
GGA —Global Positioning System Fixed Data 7
GLL—Geographic Position - Latitude/Longitude 8
GSA—GNSS DOP and Active Satellites 8
GSV—GNSS Satellites in View 9
RMC—Recommended Minimum Specific GNSS Data 9
VTG—Course Over Ground and Ground Speed 10
ZDA—Time & Date 10
NMEA Specific Sentences 10
DI – Diagnostic Message 11
TF—Quick Test 11
NM – Sentence Mask and Automatic Output Rate 12
PS – Pulse-Per-Second Configuration 12
PT – Port Configuration 13
RT – Reset the Receiver / Start-Stop GPS library 13
VR – Version Information 13
TR – TR Mode 15
GPS Data Back-up 17
Real Time clock 17
Split Search Mode 17
DEFAULT SETTINGS 18
GPS Engine Configuration 19
Receiver configuration 19
Filter configuration 19
Offset configuration 19
Application settings 19
APPLICATION INFORMATION 19
Active Antenna 19
EXHIBIT A - Datums 20
EXHIBIT B – Physical Dimensions 22

ftech corporation
16 Nan-ke 9th RD. Science-based Industrial Park, Tainan 741, Tawian, R.O.C. Taipei, Taiwan 248, R.O.C.
TEL : +886-600-8999 FAX : +886-6-505-0826
E-mail : sales@f-tech.com.tw Web-site : www.f-tech.com.tw

ARCHITECTURE HIGHLIGHTS

INDUSTRY LEADING GPS PERFORMANCE

- Builds on high performance XEMICS' XE1610 chipset
- Satellite signal tracking engine to perform GPS acquisition and tracking functions without CPU intervention
- High sensitivity: to -143 dBm tracking, superior urban canyon performances
- Position accuracy: < 5m CEP (50%) without SA (horizontal)
- Warm Start is under 32 seconds (50%)
- Hot Start is under 12 seconds (50%)
- Timing output accuracy: +/- 100 ns

LOW POWER

- Ultra low power integrated circuit design, optimized RF and DSP architectures, 19mA @ 3.3V tracking/doing fixes (vers. 2.2– 16MB Flash option)
- Further power saving thanks to 3 different power down mode
  - Power Save – RF section and GPS engine turned Off
  - Stand-by – RF section, GPS engine, and MCU clock turned Off, main power supply On, RTC running
  - Power down - RF section, GPS engine, and MCU clock turned Off, main power supply Off, RTC running on the back-up supply

FGPXMO161 & FGPXMO041 RECEIVER HIGHLIGHTS

- Embedded AT91 MCU, ARM7TDMI-based
- Small form factor
- Low cost
- Ready-to-plug solution, fully autonomous PVT solution. Easily integrated into existing systems
- High signal acquisition & tracking performances
- On-board RAM for GPS navigation data. On-board Flash memory is used to back-up data such as the Almanac
- PPS output
- On-board RTC can be supplied by a separate back-up power supply if the main supply is turned off.
- Application software can be customized for high volume applications (Flash memory)

FUNCTIONAL BLOCK DIAGRAM

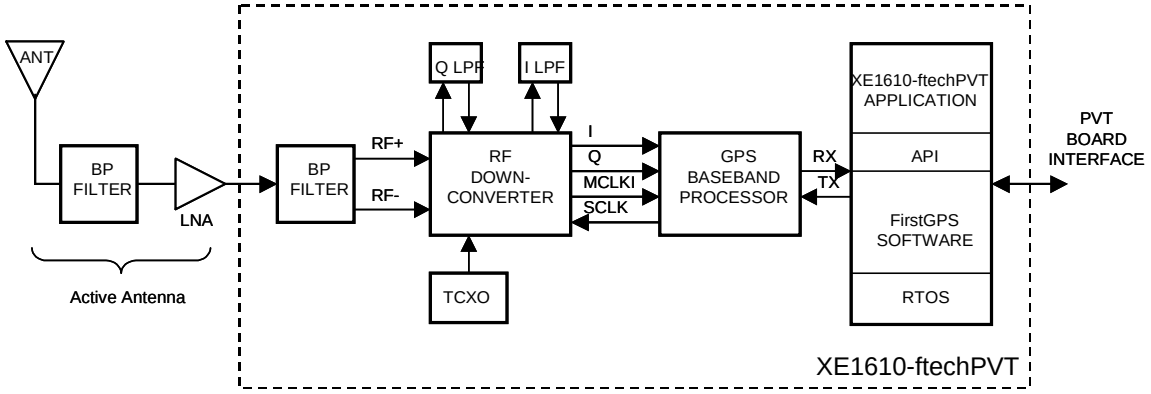

ftech corporation
16 Nan-ke 9th RD. Science-based Industrial Park, Tainan 741, Tawian, R.O.C.
TEL : +886-600-8999 FAX : +886-6-505-0826
E-mail : sales@f-tech.com.tw Web-site : www.f-tech.com.tw

PIN DESCRIPTION

PIN	NAME		DESCRIPTION
1	GND		Power and Signal Ground
2	ON/OFF	I	ON / Off command line
3	VCC		3.0 to 3.6 Volts DC Input Power Supply
4	USPED	I	UART Speed
5	RXA	I	Serial Receive Data, Port A, GPS NMEA Data
6	VRTCBK		Back-up supply for the RTC
7	TXA	O	Serial Transmit Data, Port A, GPS NMEA Data
8	PPS	O	One Pulse Per Second timing output
9	GND		Power and Signal Ground
10	RESETN	I	Manual Reset, Active low
11	ALMRDY	O	Almanac full and up to date, output
12	*STY1*	*I*	*for customer specific version*
13			N.C.
14	DELPOSN	I	Delete Initial Position
15			N.C.
16	STANDBYN	I	Stand-by (Active Low)

TECHNICAL CHARACTERISTICS

SPECIFICATIONS

	Min.	Typ.	Max.
Receiver		L1, C/A code	
Correlators/Channels		32/8	
Update Rate	1/minute	1/second	1/second
Satellite Reacquisition Time		1 second	
HotStart		12 seconds (50%)	
Warm Start		32 seconds (50%)	
Cold Start		120 seconds (50%)	
Tracking Sensitivity		-173 dBW	
Power Consumption (VCC) @ 3.3 V • Active mode, searching & tracking (v 2.2)		19 mA (avg.)	
Voltage Supply VCC	3 V	3.3 V	3.65 V
Back Up Voltage Supply VRTCBK	1.9 V		3.65 V
Output Protocol		NMEA 0183, v3.0	
Position Accuracy • Horizontal, SA off • DGPS corrected		5 meters CEP (50%) 1 meter	
Timing output accuracy	- 100 nanosec.		100 nanosec.

ftech corporation
16 Nan-ke 9th RD. Science-based Industrial Park, Tainan 741, Tawian, R.O.C.
TEL : +886-600-8999 FAX : +886-6-505-0826
E-mail : sales@f-tech.com.tw Web-site : www.f-tech.com.tw

1 Sep, 2003

PHYSICAL CHARACTERISTICS

The FGPXMO161 & FGPSMO041 are 25 x 30 x 11.3 mm (approx. 1.0” x 1.2” x 0.46”) module. This design has an operating temperature range between -40C and +85C

PROPOSED MECHANICAL INTERFACE

RF Interface Connector

Subminiature H-FL. Works with 3.0V active antenna. Ref: HIROSE, RF Conn H.FL MICROMINI SMT, H.FL-R-SMT (10)

Data Interface Connector

16 contact board-to-board flat cable connector. Ref: Fujikura DDK FF6-16A-R15 or equivalent.

INTERFACE DEFINITION, PRINCIPLES OF OPERATION

DATA INTERFACE

VCC – This is the main power supply
GND – This is the power and signal ground
VRTCBK – This is the back-up supply for the on-board hardware Real Time Clock
All I/Os on the Data Interface are related to VCC and GND levels.

ON/OFF - The ON/OFF input pin control whether the GPS engine is turned ON or OFF. If this pin is “high” whenever a reset condition occurs or if it is turned “high” when in operation, then the GPS engine is turned on. If this pin is “low” whenever a reset condition occurs then the GPS engine is not started. If this pin is turned “low” when in operation then the GPS engine is turned off. When ON/OFF is “low”, the on/off state can be superseded with the PXEMaRT manufacturer specific NMEA sentence on RXA, as defined hereafter. This input pin has a pull-up resistor.

RXA – Serial Receive data. This input pin has a pull-up resistor.
TXA – Serial Transmit data
USPED – Hardware Baudrate selection
The Serial NMEA data port (lines RXA and TXA) is an asynchronous serial port (UART). Upon reset, if the USPED input pin is “low” the setting for this port is defined by the set A of UART parameters #19 to #22 in the Default Parameters Table *, or if USPED is “high” the setting is defined by the set B #23 to #26. This setting can be modified with the PXEMaPT manufacturer specific NMEA sentence defined hereafter. This input pin has a pull-up resistor. There is no flow control on the UART.
(*) see the Default Settings section below

PPS - The PPS output pin is Pulse Per Second highly accurate timing signal generated by the on-board GPS baseband processor. The PPS signal is available only when the receiver does position fixes. Otherwise its output level is “low”. After a reset condition, the setting for this port is defined in the Default Parameters Table *, parameter #1. This setting can be modified with the PXEMaPS manufacturer specific NMEA sentence defined hereafter.
(*) see the Default Settings section below

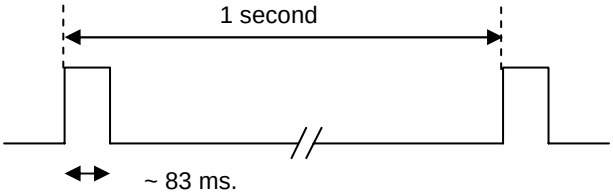

The rising edge of the PPS signal is synchronous with the GPS time.

RESETN – Manual Reset input pin. The receiver has 2 reset conditions: first, on power-on, thanks to an on-board Power On Reset circuitry; and an external reset when the RESETN pin is “low”. This input pin has a pull-up resistor.

ALMRDY – When in Active mode, this output indicates the on-board Almanac status. Upon start up and whenever the Almanac data are tested invalid or not up-to-date the output level is “low. If tested valid and up-to-date the output level is “high”.

STANDBYN – This input sets the receiver in Stand-by mode when its level is “low”. Otherwise the receiver is either in Active or Power Save modes. See below, under Operating modes for details. This input pin has a pull-up resistor.

ftech corporation
16 Nan-ke 9th RD. Science-based Industrial Park, Tainan 741, Tawian, R.O.C.
TEL : +886-600-8999 FAX : +886-6-505-0826
E-mail : sales@f-tech.com.tw Web-site : www.f-tech.com.tw

DELPOSN – Delete Initial Position pin. When set "low", this allows deleting the initial position in the RAM portion of the MCU and triggering re-computation of the tracking set. The position will not be deleted if GPS fixes are already being generated. This function is useful when the initial position is known to be incorrect, for example when the receiver is powered down, put on a plane, flown 20,000 km, and then warm-started. See timing information in the figure below. This input pin has a pull-up resistor.

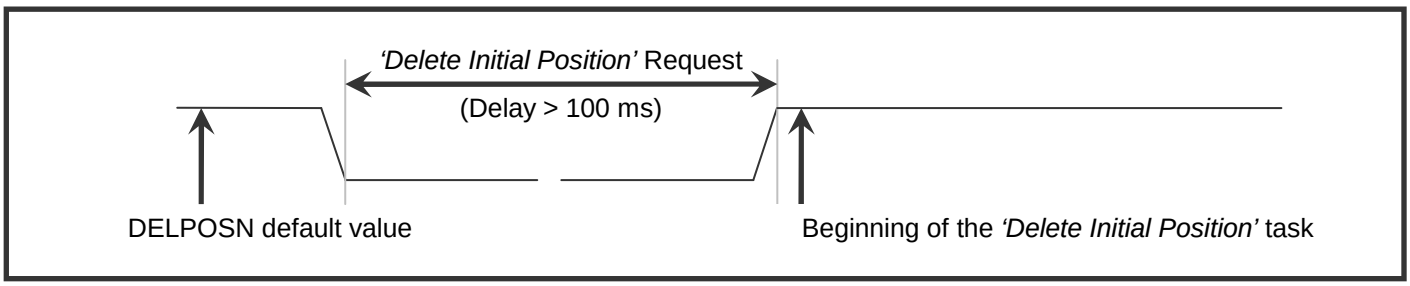

Important Note: after the DELPOSN is activated, the receiver should make a position fix before it saves GPS data in its back-up Flash memory

OPERATING MODES

The receiver has 4 main operating modes, as summarized in the table below

Mode	Description	VCC pin	ON/Off pin	STANDBY N pin	Current cons. max
Active Mode	Receiver is running, doing acquisition, tracking, position fixes	Powered	High	High	19mA (avg.)
Power Save Mode	GPS receiver functions are turned OFF, MCU in idle mode, MCU clock is running, RTC is running	Powered	Low (or thru NMEA command)	High	4 mA
Stand-by Mode	GPS receiver functions are turned OFF, MCU clock is stopped, RTC is running	Powered	Low (or thru NMEA command)	Low	<3mA
Power Down Mode	GPS receiver functions are turned OFF, MCU clock is stopped, RTC is running on the Back-up supply	No power	*Low*	*Low*	<20 uA

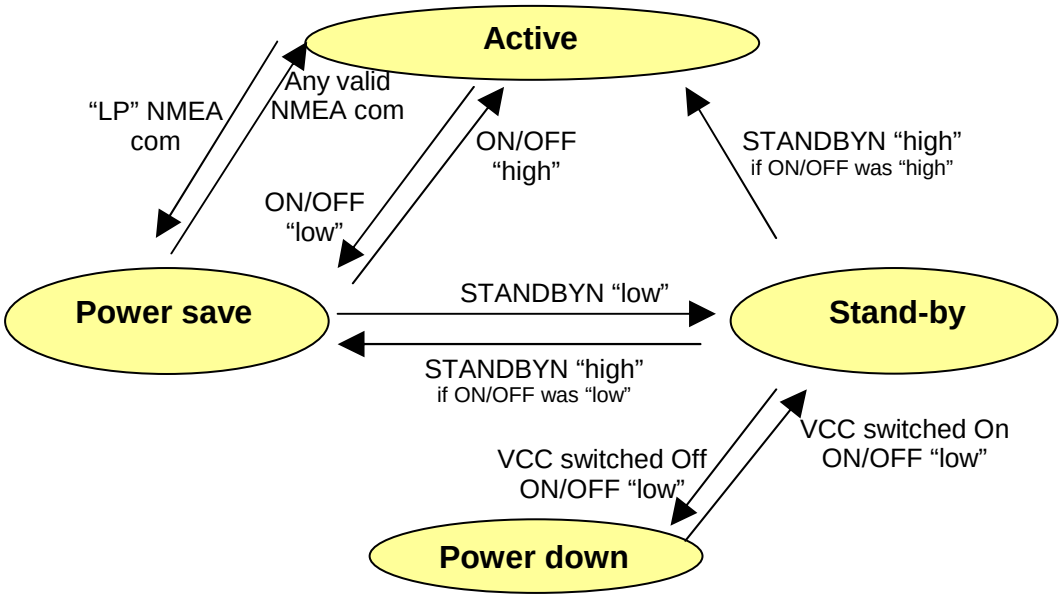

Figure 1 Switching between operating modes

ftech corporation
16 Nan-ke 9th RD. Science-based Industrial Park, Tainan 741, Tawian, R.O.C.
TEL : +886-600-8999 FAX : +886-6-505-0826
E-mail : sales@f-tech.com.tw Web-site : www.f-tech.com.tw

Notes on TTFF / start-up condition:

- When switching from Power Save or Stand-by to Active mode, the start up condition will be
  - Hot start if Almanac is valid, Ephemeris is valid (less than 4 hours old), approximate position is known and RTC is valid
  - Warm start if Almanac is valid, Ephemeris is not valid, approximate position is known and RTC is valid
  - Cold start otherwise
- When switching from Power Down to Stand-by then to Active mode, the start up condition will be
  - Warm start if the Almanac and approximate position saved in Flash are valid, and RTC is valid
  - Cold start otherwise

NMEA STANDARD MESSAGE SET SPECIFICATION

The FGPXMO161 & FGPXMO041 support NMEA-0183. Brief descriptions of the output messages are provided herein.

NMEA Standard Sentences

FGPXMOxxx receivers use the standard output messages listed in Table 1:

NMEA	Message Description
GGA	Global positioning system fixed data
GLL	Geographic position – latitude/longitude
GSA	GNSS DOP and active satellites
GSV	GNSS satellites in view
RMC	Recommended minimum specific GNSS data
VTG	Course over ground and ground speed
ZDA	Time & Date

Table 1. NMEA-0183 Messages

After a reset condition occurs, as defined above, the default setting for NMEA sentences is GGA, GSA, GSV and RMC, with update every second. This default setting can be modified in the Default Parameters Table (parameters #3 to #9) in Flash, and can also be overridden with the PXEMaNM manufacturer specific sentence defined hereafter.

GGA —Global Positioning System Fixed Data

Description: This message reports the global positioning system fixed data, as shown in Table 2.

Name	Example	Units	Description
Message ID	$GPGGA		GGA protocol header
UTC Position	161229.487		hhmmss.sss
Latitude	3723.2475		ddmm.mmmm
N/S Indicator	N		N = north or S = south
Longitude	12158.3416		dddmm.mmmm
E/W Indicator	W		E = east or W = west
Position Fix Indicator	1		See xxx0
Satellites Used	07		Range 0 to 12
HDOP	1.0		Horizontal Dilution of Precision
MSL Altitude[1]	9.0	Meters	
Units	M	Meters	
Geoid Separation[1]		Meters	
Units	M	Meters	
Age of Diff. Corr.		Second	Null fields when DGPS is not used
Diff. Ref. Station ID	0000		
Checksum	*18		
<CR><LF>			End of message termination

[1]does not support geoid corrections. Values are WGS-84 ellipsoid heights.

Table 2. GGA Data Format

ftech corporation
16 Nan-ke 9th RD. Science-based Industrial Park, Tainan 741, Tawian, R.O.C.
TEL : +886-600-8999 FAX : +886-6-505-0826
E-mail : sales@f-tech.com.tw Web-site : www.f-tech.com.tw

Value	Description
0	Fix not available or invalid
1	GPS SPS Mode, fix valid
2	Differential GPS, SPS Mode, fix valid
3	GPS PPS Mode, fix valid

Table 3. Position Fix Indicator

Example: The values reported in this example are interpreted as shown in Table 2:
`$GPGGA,161229.487,3723.2475,N,12158.3416,W,1,07,1.0,9.0,M, ,M, ,0000*18`

GLL—Geographic Position - Latitude/Longitude

Description: This message reports latitude and longitude geographic positioning data, as described in Table 4.

Name	Example	Description
Message ID	$GPGLL	GLL protocol header
Latitude	3723.2475	dd mm.mmmm
N/S Indicator	N	N = north or S = south
Longitude	12158.3416	ddd mm.mmmm
E/W Indicator	W	E = east or W = west
UTC Position	161229.487	hh mm ss.sss
Status	A	A = data valid or V = data not valid
Checksum	*2C	
<CR><LF>		End of message termination

Table 4. GLL Data Format

Example: The values reported in this example are interpreted as shown in Table 4:
`$GPGLL,3723.2475,N,12158.3416,W,161229.487,A*2C`

GSA—GNSS DOP and Active Satellites

Description: This message reports the satellites used in the navigation solution reported by the GGA message. GSA is described in Table 5.

Name	Example	Description
Message ID	$GPGSA	GSA protocol header
Mode 1	A	See Table 6
Mode 2	3	See Table 7
Satellite Used [1]	07	SV on Channel 1
Satellite Used [1]	02	SV on Channel 2
…		…
Satellite Used [1]		SV on Channel N
PDOP	1.8	Position Dilution of Precision
HDOP	1.0	Horizontal Dilution of Precision
VDOP	1.5	Vertical Dilution of Precision
Checksum	*33	
<CR><LF>		End of message termination

[1] Satellite used in solution.

Table 5. GSA Data Format

Value	Description
M	Manual – forced to operate in 2D or 3D mode
A	Automatic – allowed to automatically switch 2D/3D

Table 6. Mode 1

ftech corporation
16 Nan-ke 9th RD. Science-based Industrial Park, Tainan 741, Tawian, R.O.C.
TEL : +886-600-8999 FAX : +886-6-505-0826
E-mail : sales@f-tech.com.tw Web-site : www.f-tech.com.tw

Value	Description
1	Fix not available
2	2D
3	3D

Table 7. Mode 2

Example: The values reported in this example are interpreted as shown in Table 5:

```
$GPGSA,A,3,07,02,26,27,09,04,15, , , , , ,1.8,1.0,1.5*33
```

GSV—GNSS Satellites in View

Description: This message reports the satellites in view, their ID numbers, elevation, azimuth, and SNR values (up to four satellites per message). GSV is described in Table 8.

Name	Example	Units	Description
Message ID	$GPGSV		GSV protocol header
Number of Messages[1]	2		Range 1 to 3
Message Number [1]	1		Range 1 to 3
Satellites in View	07		
Satellite ID	07		Channel 1 (Range 1 to 32)
Elevation	79	degrees	Channel 1 (Maximum 90)
Azimuth	048	degrees	Channel 1 (True, Range 0 to 359)
SNR (C/No)	42	dBHz	Range 0 to 99, null when not tracking
…			…
Satellite ID	27		Channel 4 (Range 1 to 32)
Elevation	27	degrees	Channel 4 (Maximum 90)
Azimuth	138	degrees	Channel 4 (True, Range 0 to 359)
SNR (C/No)	42	dBHz	Range 0 to 99, null when not tracking
Checksum	*71		
<CR><LF>			End of message termination

[1] Depending on the number of satellites tracked multiple messages of GSV data may be required.

Table 8. GGA Data Format

Example: The values reported in this example are interpreted as shown in Table 8. Two messages are required to complete the data transmission.

```
$GPGSV,2,1,07,07,79,048,42,02,51,062,43,26,36,256,42,27,27,138,42*71
$GPGSV,2,2,07,09,23,313,42,04,19,159,41,15,12,041,42*41
```

RMC—Recommended Minimum Specific GNSS Data

Description: This message reports the time, date, position, course, and speed from the receiver's navigation solution. RMC is described in Table 9.

Name	Example	Units	Description
Message ID	$GPRMC		RMC protocol header
UTC Position	161229.487		Hh mm ss.sss
Status	A		A = data valid or V = data not valid
Latitude	3723.2475		Dd mm.mmmm
N/S Indicator	N		N = north or S = south
Longitude	12158.3416		Ddd mm.mmmm
E/W Indicator	W		E = east or W = west
Speed Over Ground	0.13	knots	
Course Over Ground	309.62	degrees	True
Date	120598		Dd mm yy
Magnetic Variation[1]	02.6	degrees	
E/W Indicator	W		E = east or W = west
Checksum	*10		
<CR><LF>			End of message termination

[1] All "course over ground" data are geodetic WGS84 directions.

Table 9. RMC Data Format

ftech corporation
16 Nan-ke 9th RD. Science-based Industrial Park, Tainan 741, Tawian, R.O.C.
TEL : +886-600-8999 FAX : +886-6-505-0826
E-mail : sales@f-tech.com.tw Web-site : www.f-tech.com.tw

Example: The values reported in this example are interpreted as shown in Table 9:
`$GPRMC,161229.487,A,3723.2475,N,12158.3416,W,0.13,309.62,120598, 02.6,W*10`

VTG—Course Over Ground and Ground Speed

Description: This message reports current ground course and speed data. Course is reported relative to true north only. The VTG message is defined in Table 10.

Name	Example	Units	Description
Message ID	$GPVTG		VTG protocol header
Course	309.62	degrees	Measured heading
Reference	T		True
Course	139.6	degrees	Measured heading
Reference	M		Magnetic [1]
Speed	0.13	knots	Measured horizontal speed
Units	N		Knots
Speed	0.2	km/hr	Measured horizontal speed
Units	K		Kilometer per hour
Checksum	*6E		
<CR><LF>			End of message termination

[1] All "course over ground" data are geodetic WGS84.

Table 10. VTG Data Format

Example: The values reported in this example are interpreted as shown in Table 10:
`$GPVTG,137.7,T,139.6,M,007.4,N,013.7,K*47`

ZDA—Time & Date

Description: This message reports current time and date. The ZDA message is defined in Table 11.

Name	Example	Units	Description
Message ID	$GPZDA		ZDA protocol header
Hour, Min, Sec, Sub Sec	114523.62		hhmmss.ss
Day	12		day in UTC, 01 to 31
Month	04		month in UTC, 01 to 12
Year	2001		year in UTC
Local Zone Hours	10		local zone hours, +/- 13 hours
Local Zone Minutes	34		local zone minutes, 0 to +59
<CR><LF>			End of message termination

Table 11 ZDA Data Format

Example: The values reported in this example are interpreted as shown in Table 10:
`$GPZDA,114523.62,12,04,2001,10,34*6E`

NMEA SPECIFIC SENTENCES

The NMEA 0183 Standard dictates that proprietary NMEA sentences have the following structure:

$Paaaxxxxxxxxxxxxxx*hh

where *aaa* – mnemonic code, XEM in our case; *xxxxxxxxx*…– data; *hh* – sentence checksum

Two types of input sentences are defined: *query* and *set*. *Query* sentences request certain information from the receiver. *Set* sentences allow configuring the receiver with certain configuration parameters or forcing the receiver to perform a specific action. For each type of input sentences, a corresponding output *response* sentence is defined.
For a *query* sentence, the *response* sentence contains requested data. For a *set* sentence, the *response* sentence contains the status of the action requested in the *set* sentence. Taking these aspects into account, the following is the general structure of the specific NMEA sentence:

ftech corporation
16 Nan-ke 9th RD. Science-based Industrial Park, Tainan 741, Tawian, R.O.C.
TEL : +886-600-8999 FAX : +886-6-505-0826
E-mail : sales@f-tech.com.tw Web-site : www.f-tech.com.tw

$PXEMmaa,x1,x2,x3,x4,….,xN*hh

where *m* – sentence type: 'Q' for 'query', 'S' for 'set', 'R' for 'response'; *aa* – proprietary sentence identifier (see below); *x1…xN* – data parameters (only for *set* and *query response* sentences); *hh* – sentence checksum
NOTE: Each of the data parameters must be preceded with a comma, except for the *aa* sentence identifier, and the checksum which is preceded with a checksum delimiter character '*'.

- QUERY sentence: to send a *query* sentence, no data fields are transmitted. The following format is used:
  $PXEMQaa*hh

- RESPONSE sentence to QUERY: for a *query* sentence, a *response* sentence with all fields is transmitted. The following format is used:
  $PXEMRaa,x1,x2,x3,x4,….,xN*hh

- SET sentence: to send a *set* sentence, x1…xN must contain valid values. The following format is used:
  $PXEMSaa,x1,x2,x3,x4,….,xN*hh

- RESPONSE sentence to SET: for a *set* sentence, a status *response* sentence is transmitted. The following format is used:
  $PXEMRaa,s*hh
  where *s* is the status of the requested action: 'A' if the action was successful; 'V' otherwise.

The following proprietary NMEA sentence identifiers are implemented:

DI – Diagnostic Message

This sentence outputs a diagnostic string. It is used to report various error conditions. This is a response-only sentence.

$PXEMRDI,ccccccc*hh where ccccccc is a diagnostic string up to 50 characters

TF—Quick Test

Description: This sentence contains information which helps a monitoring station figure out the status of the receiver. This sentence can be automatically output at a given rate by setting Bit #9 of the NMEA sentence mask (see NM-Sentence Mask and Automatic Output Rate section below). This is a query-only sentence.

$PXEMaTF,a,a,xxxxxx,xx,x,llll.llllll,a,yyyyy.yyyyy,a,xxxxx*hh

Name	Example	Units	Description
Message ID	$PXEMaTF		TF protocol header, (a: Q = query; R = response)
BBFStatus	A		a: BBFlash status on startup (A = valid; V = invalid)
AlmStatus	A		a: Almanac completion status (A = complete; V = incomplete)
GPSTime	12367	seconds	xxxxxx: GPS time of week
SatInView	06		xx: Number of satellites in use
FixSource	3		x: Position fix source (0=no fix; 2=2D fix; 3=3D fix)
Lat	34.1453	deg	llll.llllll: Latitude of the current position fix
N/S	N		a: N (North), S (South)
Lon		deg	yyyyy.yyyyy: Longitude of the current position fix
E/W	E		a: E (East), W (West)
Alt	283	meter	xxxxx: Antenna altitude ref mean-sea-level (MSL geoid)
<CR><LF>			End of message termination

Table 12 TF Data Format

Example:
```
$PXEMQTF*6E
$PXEMRTF,A,A,112345,05,2,45.45677,N,6.26789,E,387*6E
```


ftech corporation
16 Nan-ke 9th RD. Science-based Industrial Park, Tainan 741, Tawian, R.O.C.
TEL : +886-600-8999 FAX : +886-6-505-0826
E-mail : sales@f-tech.com.tw Web-site : www.f-tech.com.tw

NM – Sentence Mask and Automatic Output Rate

This sentence configures the application to automatically output standard NMEA sentences at a specified time interval.

$PXEMaNM,xxxx,xx*hh

Name	Example	Units	Description
Message ID	$PXEMaNM		Proprietary NM protocol header, a-mode (S = set; R = response)
Mask	0008		xxxx Output sentence mask, hex value (see Notes below)
Rate	01	sec	xx Automatic output sentence rate (00 to 99)
<CR><LF>			End of message termination

Table 13 NM Data Format

Notes: xxxx is a hexadecimal value representing a 2-byte bit-mask where a specific bit sets or clears automatic output of a particular NMEA sentence according to the table below. The mask is derived by combining all bits which represent the NMEA sentences which will be automatically output. For example, to automatically output GGA, GSA, ZDA, and RMC, the bits 0, 4, 5, and 8 are set to 1 in a 2-byte mask, resulting in a hex value 0x131 (0x1+0x10+0x20+0x100). This value is sent as an ASCII string '0131' in the *xxxx* field of the NM sentence.

NMEA xxxx

Sentence	*Bit#*	*Field value*
GGA	0	0001
GLL	1	0002
VTG	2	0004
GSV	3	0008
GSA	4	0010
ZDA	5	0020
RMC	8	0100
TF	9	0200

Table 14 Possible MASK field values for the NM command

Example: `$PXEMSNM,0008,01*6E (set)`
`$PXEMRNM,a*6E (response to set: a – action status: A = success; V = failure)`

PS – Pulse-Per-Second Configuration

This sentence sets the pulse-per-second (PPS) output on or off. This is a set-only sentence.

$PXEMaPS,x*hh

Name	Example	Units	Description
Message ID	$PXEMaPS		Proprietary PS protocol header, a-mode (S = set; R = response0
On/Off	1		PPS output switch (1 = ON; 0 = OFF)
<CR><LF>			End of message termination

Table 15 PS Data Format

Example:
`$PXEMSPS,1*6E (set)`
`$PXEMRPS,a*6E (response to set: a – action status: A = success; V = failure)`

ftech corporation
16 Nan-ke 9th RD. Science-based Industrial Park, Tainan 741, Tawian, R.O.C.
TEL : +886-600-8999 FAX : +886-6-505-0826
E-mail : sales@f-tech.com.tw Web-site : www.f-tech.com.tw

PT – Port Configuration

This sentence configures the application serial port communication parameters.

$PXEMaPT,xxxxxx,x,a,x*hh

Name	Example	Units	Description
Message ID	$PXEMaPT		Proprietary PT protocol header, a-mode (S = set; R = response)
Baudrate	009600		xxxxxx Baud rate (057600, 038400, 019200, 009600, 004800, 002400)
Data length	8		x # of data bits (7 or 8)
Parity	N		Parity (N = None; O = Odd; E = Even)
Stop bit	1		# of stop bits (1 or 2)
<CR><LF>			End of message termination

Table 16 PT Data Format

Example:

```
$PXEMSPT,009600,8,N,1*6E   (set)
$PXEMRPT,a*6E   (response to set: a – action status: A = success; V = failure)
```

RT – Reset the Receiver / Start-Stop GPS library

This sentence forces the receiver to perform a software reset. It also allows starting up and shutting down the GPS library without performing a full software reset. This is a set-only sentence.

$PXEMaRT,a*hh

Name	Example	Units	Description
Message ID	$PXEMaRT		Proprietary RT protocol header, a-mode (S = set; R = response)
Command	S		C = cold software reset W = warm software reset H = hot software reset S = start the GPS library X = shut down the GPS library
<CR><LF>			End of message termination

Table 17 RT Data Format

Example:

```
$PXEMSRT,W*6E   (set)
$PXEMRRT,a*6E   (response to set: a – action status: A = success; V = failure)
```

VR – Version Information

This sentence obtains software versions for the measurement platform (MPM) firmware, GPS API, GPS Library, native RTOS, and native processor (CPU). This is a query-only sentence.
Note: A complete VR sentence returns only the version of a particular product component one at a time (either MPM firmware, API, library, RTOS or CPU). The sentence must include the component type for which to obtain the version for any given query.

$PXEMaVR,a,cccccc,xx,xx,xx,xx,xx,xxxx*hh

ftech corporation
16 Nan-ke 9th RD. Science-based Industrial Park, Tainan 741, Tawian, R.O.C.
TEL : +886-600-8999 FAX : +886-6-505-0826
E-mail : sales@f-tech.com.tw Web-site : www.f-tech.com.tw

Name	Example	Units	Description
Message ID	$PXEMaVR		Proprietary RT protocol header, a-mode (Q = query; R = response)
Component type	A		M = measurement platform (MPM) firmware A = GPS API N = GPS Library R = native RTOS U = native processor (CPU) V = Software build
Name	abcdef		variable length field; may be up to 17 characters long
Maj version	04		Major version number (00 to 99)
Min version	02		Minor version number (00 to 99)
Beta version	03		Beta version number (00 to 99)
Month	10		Month of the release (01 to 12)
Day	27		Day of the release (01 to 31)
Year	2002		Year of the release
<CR><LF>			End of message termination

Table 18 VR Data Format

Example:
```
$PXEMQVR,R*6E   (query)
$PXEMRVR,R,nucleus,04,03,03,10,27,2000*6E   (response to query)
```

GS – Geodetic System Configuration
This sentence sets the geodetic system use to compute the geographic positioning data.

$PXEMaGS**,**ee**,**xxxx**.**xxxxxx**,**yyyy**.**yyyyyy**,**zzzz**.**zzzzzz***hh

Name	Example	Units	Description
Message ID	$PXEMaGS		Proprietary GS protocol header, a-mode (S = set; R = response)
Ellipsoid	12		ee Ellipsoid Model (see table below)
Delta X	-0.148	m	xxxx.xxxxxx, shift parameter on x axis
Delta Y	0.096	m	yyyy.yyyyyy, shift parameter on y axis
Delta Z	0.122	m	zzzz.zzzzzz, shift parameter on z axis
<CR><LF>			End of message termination

Table 19 GS Data Format

Index	Ellipsoid Name	Semi-Major Axis	Flattening
00	Airy 1830	6377563.396	299.3249646
01	Australian National & South American 1969	6378160	298.25
02	Bessel 1841 Ethiopia	6377397.155	299.1528128
03	Bessel 1841 Namibia	6377483.865	299.1528128
04	Clarke 1866	6378206.4	294.9786982
05	Clarke 1880	6378249.145	293.465
06	Everest Brunei and E. Malaysia	6377298.556	300.8017
07	Everest India 1830	6377276.345	300.8017
08	Everest India 1956	6377301.243	300.8017
09	Everest Pakistan	6377309.613	300.8017
10	Everest W. Malaysia and Singapore 1948	6377304.063	300.8017
11	Geodetic Reference System 1980	6378137	298.257222101
12	Helmert 1906	6378200	298.3
13	Hough 1960	6378270	297
14	Indonesian 1974	6378160	298.247
15	International 1924 & Hayford	6378388	297
16	Krassovsky 1940	6378245	298.3
17	Modified Airy	6377340.189	299.3249646
18	Modified Fischer 1960	6378155	298.3
19	WGS 1972	6378135	298.26
20	WGS 1984	6378137	298.257223563

Table 20 Ellipsoid models

ftech corporation
16 Nan-ke 9th RD. Science-based Industrial Park, Tainan 741, Tawian, R.O.C.
TEL : +886-600-8999 FAX : +886-6-505-0826
E-mail : sales@f-tech.com.tw Web-site : www.f-tech.com.tw

Example:
```
$PXEMSGS,12,-0.148,0.096,0.122*44   (set)
$PXEMRGS,a,12,-0.148,0.096,0.122*08 (response to set: a – action status: A = success; V = failure)
```
see also Exhibit A for further examples

LP – Power Save Mode

This sentence sets the receiver in Power Save mode. To go back to the Active mode, users should send any valid NMEA sentence to the receiver. Do not toggle the ON/OFF pin to go to the Active Mode if a NMEA LP command is used to switch to the Power Save mode

$PXEMaLP*****hh

Name	Example	Units	Description
Message ID	$PXEMaLP		Proprietary LP protocol header, a-mode (S = set; R = response)
<CR><LF>			End of message termination

Table 21 LP Data format

Example:
```
$PXEMSLP*4F (set)
$PXEMRLP,a*23     (response to set: a – action status: A = success; V = failure)
```

TR – TR Mode

This type of sentence provides access to advanced features. TR types of proprietary NMEA sentences are listed below.

Set the RTC time

The purpose of GPS time is to allow use of the almanac data and position to determine which satellites are in view and to allow rough ranging to the satellites. FGPXMOxxx products load GPS time every start-up. If the local RTC, from which this GPS time is loaded, is not valid it is possible to provide the GPS time from another source. The accuracy of this external source should be better than 30 minutes.

The time/date information in the GPS system is coded using a standard GPS time format that is a week number and the time of the week. The week number of the GPS time is the number of weeks from Sunday, January 6 1980. However, due to the GPS data message format, the week number is a modulo-1024 number (10-bit number). The last rollover occurred on August 22, 1999. The next rollover will happen on April 7, 2019. The GPS time of the week is the number of milliseconds since the beginning of the current GPS week, the GPS week starting on Sundays at 0 hour, 0 minute, 0 millisecond.

When the GPS engine is running the TR sentence to use is:

$PXEMSTR,SSIT,WeekNb,TimeOfWeek,Accu*_hh_

where:
- WeekNb is the week number (see above)
- TimeOfWeek is the time of the week information, in milliseconds (see above)
- Accu reflects the accuracy of the time information provided to the system. Use 1 only if the time of the week and the week number are valid (accuracy better than 30 minutes), otherwise -1

Important notes: if the Accu parameter is set to 1, the hardware RTC will be updated when receiving this command. However, if the Accu parameter is set to -1, the hardware RTC will NOT be updated when receiving the sentence. Also, it is strongly advised to avoid setting the Accu parameter to 1 if one is not sure about the accuracy, as this may lead to improper behavior.

Set the initial position

The purpose of the rough initial position is to allow use of the almanac data and GPS time to determine which satellites are in view. This is achieved by sending a proprietary TR command which format is:

ftech corporation
16 Nan-ke 9th RD. Science-based Industrial Park, Tainan 741, Tawian, R.O.C.
TEL : +886-600-8999 FAX : +886-6-505-0826
E-mail : sales@f-tech.com.tw Web-site : www.f-tech.com.tw

1 Sep, 2003

$PXEMSTR,SSIP,L.LLL,O.OOO,Alt,Accu*hh

where:

- L.LLL is the latitude expressed in radian
- O.OOO is the longitude expressed in radian
- Alt is the altitude expressed in meter. Note that if you are not sure about the altitude, a default value of 200 gives acceptable results in most cases.
- Accu reflects the accuracy of the initial position. Use -1

For example, to set the position to New Delhi in India (coordinates being lat: 0.499, lon: 1.347), the full sentence should be:

`$PXEMSTR,SSIP,0.499,1.347,200,-1*hh`

The initial position can only be set when the GPS engine is running and before the system does position fix. Note that an initial position error of 1,000 km will result in an almanac based satellite search set which has rotated out of view by approximately 10%. Beyond this, the specified performance will degrade. Initial position errors greater than 3,000 km will result in a constellation which is almost out of view. So, the recommendation is to set the initial position only if its accuracy is better than 1,200 km.

Important Note: after the receiver gets this command the content of the GPS data RAM will be saved in the back-up Flash upon the first position fix.

Delete the initial position

This NMEA sentence has the same effect as the hardware input DELPOSN. It allows deleting the initial position in the RAM portion of the MCU and triggering re-computation of the tracking set. The position will not be deleted if GPS fixes are already being generated. This function is useful when the initial position is known to be incorrect, for example when the receiver is powered down, put on a plane, flown 20,000 km, and then warm-started. The command is:

$PXEMSTR,SSDI*74

Important Note: after the PXEMSTR,SSDI command is sent, the receiver should make a position fix before it saves GPS data in its back-up Flash memory

ftech corporation
16 Nan-ke 9th RD. Science-based Industrial Park, Tainan 741, Tawian, R.O.C.
TEL : +886-600-8999 FAX : +886-6-505-0826
E-mail : sales@f-tech.com.tw Web-site : www.f-tech.com.tw

GPS DATA BACK-UP

The almanac data is the information transmitted by each satellite on the orbits and state (health) of the entire constellation. The ephemeris is a list of accurate positions or locations of celestial objects as a function of time. So, the availability of almanac and ephemeris data, in addition to time and approximate position, allows the GPS receiver to rapidly acquire satellites as soon as it is turned on. There are 3 possible start conditions when the receiver is turned on: a) the Cold Start, that is the start-up sequence of the receiver when no initialization data is available; b) the Warm Start, that is the start-up sequence of the receiver when the last position, the time and the almanac information are available; and c) the Hot Start, that is the start-up sequence of the receiver when the ephemeris, the last position, the time and the almanac information are available.

In the FGPXMO161 & FGPXMO041 design the GPS data structure, including almanac, ephemeris and last position fix, is copied into a specific sector of the on-board Flash memory, that's the back-up Flash sector, or BBFlash. The data are stored the first time the almanac is complete and up-to-date, then every M minutes, where M is defined in Default Parameters Table *, parameter #37. Alternatively, the Flash can be programmed with valid information during the manufacturing process. This is to avoid downloading it from satellites, which takes approx. 12.5 minutes. Then, as long as the main power supply remains turned On, the GPS data structure is kept in RAM. However, data in RAM are not maintained if the main supply is switched Off (or in case of a power failure). In this case, upon power up, these data are uploaded from the Flash back-up memory into the GPS data RAM. Provided these data are valid – 2 months for the Almanac, 2 hours for ephemeris – the TTFF will be shorter than Cold Start TTFF, since the receiver will be in Warm or Hot start condition.
(*) see the Default Settings section below

With the Flash technology embedded in 4MB v2.0, it takes approx. 20 seconds to erase and update the Flash sectors where the GPS data structure is stored, while this reduces to 0.5 second for the 16 MB v.2.2.

REAL TIME CLOCK

The receiver board has a hardware Real Time Clock chip that operates independently from the MCU and the GPS function. When the GPS receiver is active and as soon as the GPS time becomes available the RTC is synchronized with GPS time. Then, as long as GPS time is available, the RTC is synchronized every 60 minutes.

If the main power supply VCC is turned OFF and provided the VRTCBK supply is available, the RTC operates and keep RTC information up to date. By doing so, when both the main VCC supply and the GPS receiver are turned ON again the time information will be available.

SPLIT SEARCH MODE

This feature is useful when the initial position is incorrect, for example when the receiver is powered down, put on a plane, flown 10,000 km, and then warm-started. If the user does not activate the DELPOSN I/O or does not sent the proprietary PXEMSTR,SSDI NMEA command, the receiver will start to search for the satellites it believes are above it (warm start condition). However, after approximately 5 minutes, it will free up some of its channels to search for other satellites in the constellation. When it finds one it will free up more channels and recover from a Warm start with an inaccurate initial position.

ftech corporation
16 Nan-ke 9th RD. Science-based Industrial Park, Tainan 741, Tawian, R.O.C.
TEL : +886-600-8999 FAX : +886-6-505-0826
E-mail : sales@f-tech.com.tw Web-site : www.f-tech.com.tw

DEFAULT SETTINGS

A number of system settings are stored in a particular area of the embedded Flash. That's the Default Parameters Table, whose content is listed hereafter. Some of these settings can be modified by sending a proprietary NMEA sentence to the receiver, as defined above.

#	Default parameter	Data Type	Default value	Range values
1	PPS Output Enabled	Char	Y	Y / N
2	NMEA refresh rate	Integer	1 second	1 to 99 seconds
3	NMEA GGA output displ'd	Char	Y	Y / N
4	NMEA GLL output displ'd	Char	N	Y / N
5	NMEA VTG output displ'd	Char	N	Y / N
6	NMEA GSV output displ'd	Char	Y	Y / N
7	NMEA GSA output displ'd	Char	Y	Y / N
8	NMEA ZDA output displ'd	Char	N	Y / N
9	NMEA RMC output displ'd	Char	Y	Y / N
10	NMEA TF output displ'd	Char	N	Y / N
11	NMEA GGA display order	Integer	2	1 .. 8
12	NMEA GLL display order	Integer	5	1 .. 8
13	NMEA VTG display order	Integer	6	1 .. 8
14	NMEA GSV display order	Integer	4	1 .. 8
15	NMEA GSA display order	Integer	1	1 .. 8
16	NMEA ZDA display order	Integer	7	1 .. 8
17	NMEA RMC display order	Integer	3	1 .. 8
18	NMEA TF display order	Integer	8	1 .. 8
19	Serial Port A Baudrate	Integer	4800	2400 / 4800 / 9600 / 19200 / 38400 / 57600
20	Serial Port A Data bits	Integer	8	7 .. 8
21	Serial Port A Stop bits	Integer	1	1 .. 2
22	Serial Port A Parity bits	Character	N	N / O / E
23	Serial Port B Baudrate	Integer	9600	2400 / 4800 / 9600 / 19200 / 38400 / 57600
24	Serial Port B Data bits	Integer	8	7 .. 8
25	Serial Port B Stop bits	Integer	1	1 .. 2
26	Serial Port B Parity bits	Character	N	N / O / E
27	Dynamic Code	Integer	5	1 – Land 2 – Sea 3 – Air 4 – Stationary 5 - Automobile
28	Max Oscillator Offset	Real	7.9e-6	Depends on the Oscillator
29	Elevation Mask	Real	5	0 to 10 degrees
30	Signal Level Mask (AMU)	Real	1.8	1 to 6
31	DOP Mask	Real	12	6 to 20
32	PDOP Switch	Real	8	6 to 8
33	Geodetic System Ellipsoid	Integer	20	0 to 20
34	Geodetic System Delta X	Real	0	-9999.99999 to +9999.99999
35	Geodetic System Delta Y	Real	0	-9999.99999 to +9999.99999
36	Geodetic System Delta Z	Real	0	-9999.99999 to +9999.99999
37	BBFlash Update rate (minutes)	32 bits Integer	10,080 v 2.0 - 4MB Flash option 10 - v 2.2 - 16MB Flash option	1 to (2**32)-1

ftech corporation
16 Nan-ke 9th RD. Science-based Industrial Park, Tainan 741, Tawian, R.O.C.
TEL : +886-600-8999 FAX : +886-6-505-0826
E-mail : sales@f-tech.com.tw Web-site : www.f-tech.com.tw

GPS ENGINE CONFIGURATION

In addition, there are some settings for the embedded GPS library that cannot be modified by the users

Receiver configuration

DGPS Mode	DGPS Off	

Filter configuration

Kalman Filter

Offset configuration

Offset	0 ppm	
Window	-1 ppm	

Application settings

Number of channels	8	
Week epoch	1024	the offset number of 1024 week periods since 6 January 1980. Setting to 1024 includes all dates between August 22, 1999 and March 2019.

APPLICATION INFORMATION

ACTIVE ANTENNA

For proper operation, the FGPXMO161 & FGPXMO041 receiver should be operated with an active GPS antenna that has the following characteristics

Power supply voltage	2.7 - 3.6 V
Frequency range	1,575.42+/-1.023MHz
LNA Gain	26 dB typ. at 3.0 V
LNA NF	1.3 dB typ. at 3.0 V
Antenna and LNA total Gain	25 dBi Max at 3.0 V

ftech corporation
16 Nan-ke 9th RD. Science-based Industrial Park, Tainan 741, Tawian, R.O.C.
TEL : +886-600-8999 FAX : +886-6-505-0826
E-mail : sales@f-tech.com.tw Web-site : www.f-tech.com.tw

EXHIBIT A - DATUMS

The following table illustrates datums for some cities around the world.

Country	City	NNEA Syntax	WGS-84 Datum	Local Datum
Wales	Cardiff	$PXEMSGS,00,375,-111,431*78	51° 23' N 3° 20' W 100.0 m	51° 22' 58.454" N 3° 19' 55.396" W 51.497 m
Australia	Sydney	$PXEMSGS,01,-134,-48,149*40	33° 52' S 151° 12' E 100.0 m	33° 52' 5.738" S 151° 11' 55.851" E 81.918 m
Japan	Tokyo	$PXEMSGS,02,-148,507,685*5C	35° 41' N 139° 46' E 100.0 m	35° 40' 48.239" N 139° 46' 11.591" E 59.959 m
Namibia	Windhoek	$PXEMSGS,03,616,-97,251*60	22° 34' S 17° 5' E 100.0 m	22° 33' 58.644" S 17° 5' 3.088" E 77.040 m
Cuba	Havana	$PXEMSGS,04,-3,142,183*50	23° 08' N 82° 21' W 100.0 m	23° 7' 58.302" N 82° 21' 0.559" W 125.109 m
Senegal	Dakar	$PXEMSGS,05,-128,-18,224*44	14° 42' N 17° 29' W 100.0 m	14° 41' 57.554" N 17° 28' 58.140" W 66.314 m
Brunei	Bandar S. B.	$PXEMSGS,06,-679,669,-48*4C	4° 56' N 114° 50' E 100.0 m	4° 56' 3.033" N 114° 49' 49.116" E 52.227 m
Thailand	Bangkok	$PXEMSGS,07,210,814,289*7D	13° 44' N 100° 30' E 100.0 m	13° 43' 54.002" N 100° 30' 11.811" E 141.421 m
India	Calcutta	$PXEMSGS,08,295,736,257*73	22° 32' N 88° 20' E 100.0 m	22° 31' 57.337" N 88° 20' 9.571" E 122.930 m
Pakistan	Karachi	$PXEMSGS,09,283,682,231*7B	24° 48' N 66° 59' E 100.0 m	24° 47' 58.714" N 66° 58' 59.779" E 128.006 m
Singapore	Singapore	$PXEMSGS,10,-11,851,5*62	1° 18' N 103° 50' E 100.0 m	1° 18' 0.179" N 103° 50' 6.237" E 103.999 m
Russia	*Moscow*	*$PXEMSGS,11,1.08,0.27,0.9*6C*	*55° 46' N* *37° 40' E* *100.0 m*	*55° 46' 0.010" N* *37° 39' 59.865" E* *99.446 m*
Egypt	Cairo	$PXEMSGS,12,-130,110,-13*44	29° 52' N 31° 20' E 100.0 m	29° 51' 59.415" N 31° 19' 53.980" E 89.458 m
Marshall Island	Majuro	$PXEMSGS,13,102,52,-38*57	41° 32' N 12° 18' E 100.0 m	41° 32' 6.227" N 12° 17' 58.745" E -50.775 m
Indonesia	Djakarta	$PXEMSGS,14,-24,-15,5*75	6° 11' S 106° 50' E 100.0 m	6° 11' 0.141" S 106° 49' 59.111" E 84.912 m
France	Paris	$PXEMSGS,15,-87,-96,-120*5D	48° 49' N 2° 29' E 100.0 m	48° 49' 3.271" N 2° 29' 4.516" E 50.964 m
Somalia	Mogadiscio	$PXEMSGS,16,-43,-163,45*72	2° 2' N 49° 19' E 100.0 m	2° 1' 58.354" N 49° 19' 2.383" E 141.943 m
Ireland	Dublin	$PXEMSGS,17,506,-122,611*58	53° 22' N 6° 21' W	53° 21' 59.163" N 6° 20' 56.468" W

ftech corporation
16 Nan-ke 9th RD. Science-based Industrial Park, Tainan 741, Tawian, R.O.C.
TEL : +886-600-8999 FAX : +886-6-505-0826
E-mail : sales@f-tech.com.tw Web-site : www.f-tech.com.tw

			100.0 m	47.599 m
Singapore	Singapore	$PXEMSGS,18,7,-10,26*51	1° 18' N 103° 50' E 100.0 m	1° 18’ 0.833” N 103° 50’ 0.142” E 93.969 m
Ireland	*Dublin*	*$PXEMSGS,19,0,0,4.5*60*	*53° 22' N* *6° 21' W* *100.0 m*	*53° 21’ 59.906” N* *6° 21’ 0.554” W* *96.856 m*
Ireland	Dublin	$PXEMSGS,20,0,0,0*75	53° 22' N 6° 21' W 100.0 m	53° 22' N 6° 21' W 100.0 m

Order information

Part no	Item Description
FGPXMO161	16MB flash chipset GPS module
FGPXMO041	4MB flash chipset GPS module
FGPXMO162	16MB flash GPS module with soldered antenna
FGPXMO042	4MB flash GPS module with soldered antenna
FGPXMO163	16MB flash GPS module with mounting tab
FGPXMO043	4MB flash GPS module with mounting tab
FGPXEVK01	GPS module evaluation kit
FGPAN5M01	GPS external patch antenna(low power) (30dBi 3dB) /w 5M cable
FGPAN10C2	GPS internal patch antenna /w 10cm helose cable

ftech corporation
16 Nan-ke 9th RD. Science-based Industrial Park, Tainan 741, Tawian, R.O.C.
TEL : +886-600-8999 FAX : +886-6-505-0826
E-mail : sales@f-tech.com.tw Web-site : www.f-tech.com.tw

EXHIBIT B – PHYSICAL DIMENSIONS

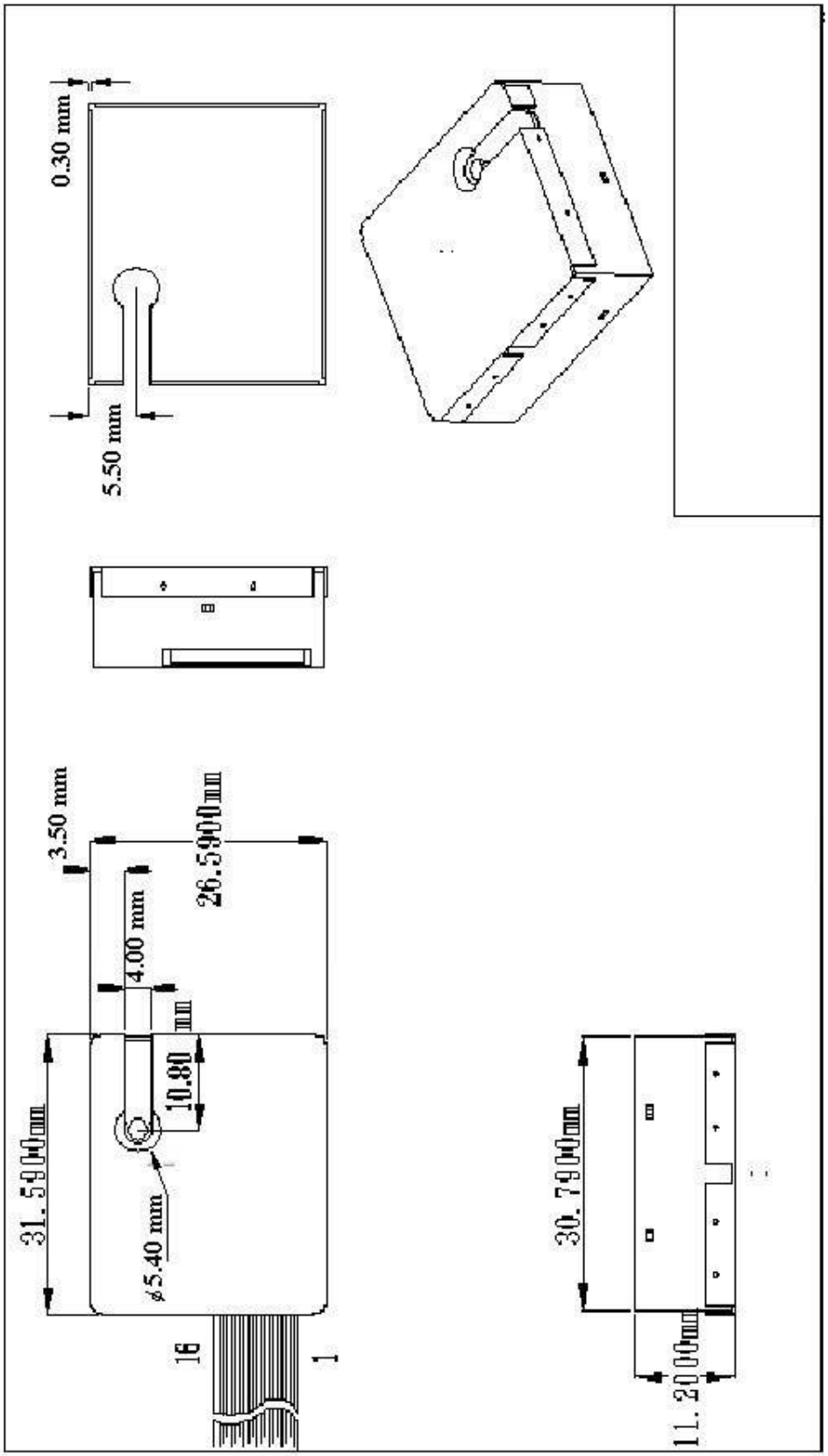

ftech corporation
16 Nan-ke 9th RD. Science-based Industrial Park, Tainan 741, Tawian, R.O.C.
TEL : +886-600-8999 FAX : +886-6-505-0826
E-mail : sales@f-tech.com.tw Web-site : www.f-tech.com.tw

1 Sep, 2003

Optional Mounting Tab Option

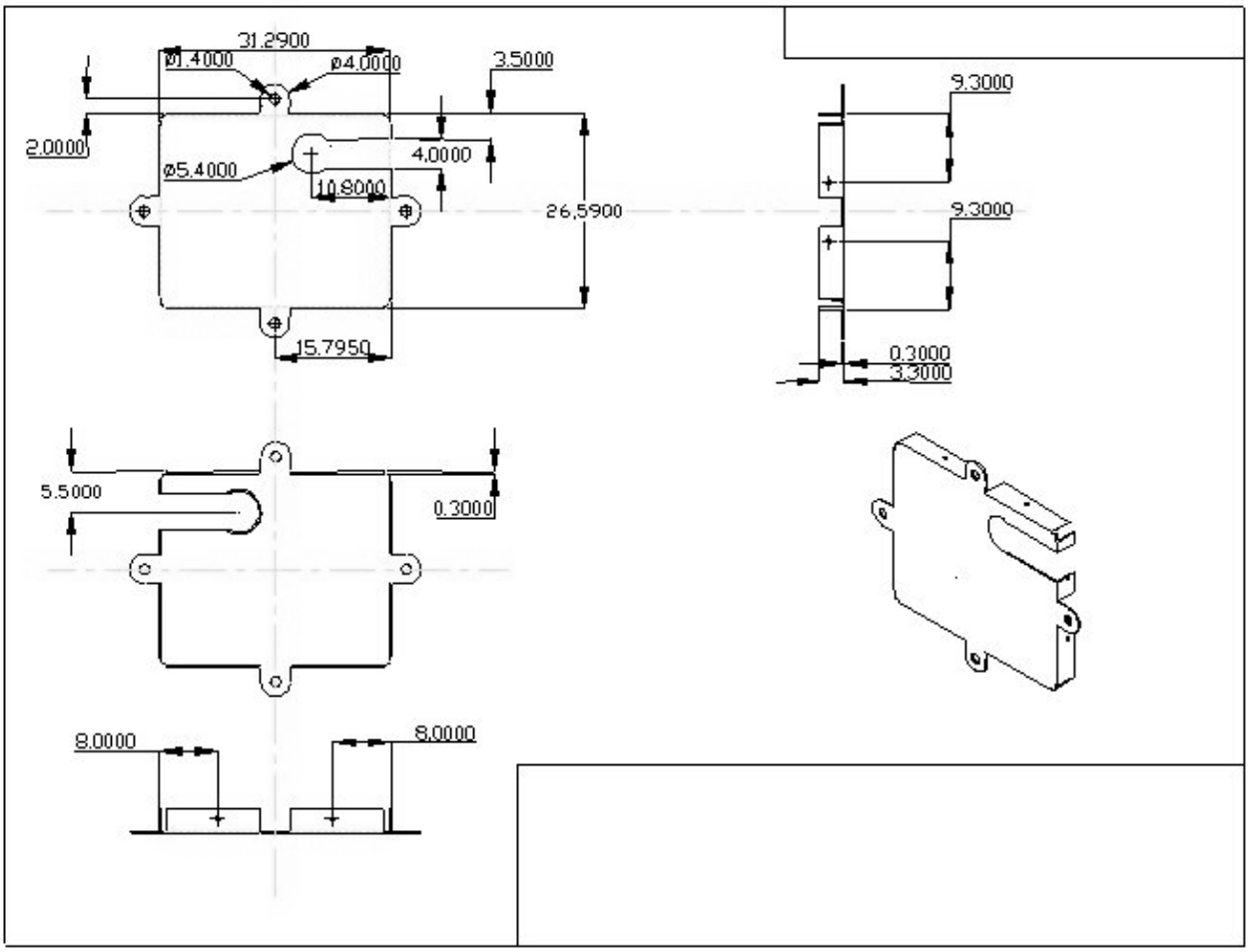

XEMICS 2003
All rights reserved. Reproduction in whole or in part is prohibited without the prior written consent of the copyright owner. The information presented in this document does not form part of any quotation or contract, is believed to be accurate and reliable and may be changed without notice. No liability will be accepted by the publisher for any consequence of its use. Publication thereof does not convey nor imply any license under patent or other industrial or intellectual property rights.
XEMICS PRODUCTS ARE NOT DESIGNED, INTENDED, AUTHORIZED OR WARRANTED TO BE SUITABLE FOR USE IN LIFE-SUPPORT APPLICATIONS, DEVICES OR SYSTEMS OR OTHER CRITICAL APPLICATIONS. INCLUSION OF XEMICS PRODUCTS IN SUCH APPLICATIONS IS UNDERSTOOD TO BE UNDERTAKEN SOLELY AT THE CUSTOMER'S OWN RISK.
Should a customer purchase or use Xemics products for any such unauthorized application, the customer shall indemnify and hold Xemics and its officers, employees, subsidiaries, affiliates, and distributors harmless against all claims, costs damages and attorney fees which could arise.

ftech corporation
16 Nan-ke 9th RD. Science-based Industrial Park, Tainan 741, Tawian, R.O.C.
TEL : +886-600-8999 FAX : +886-6-505-0826
E-mail : sales@f-tech.com.tw Web-site : www.f-tech.com.tw