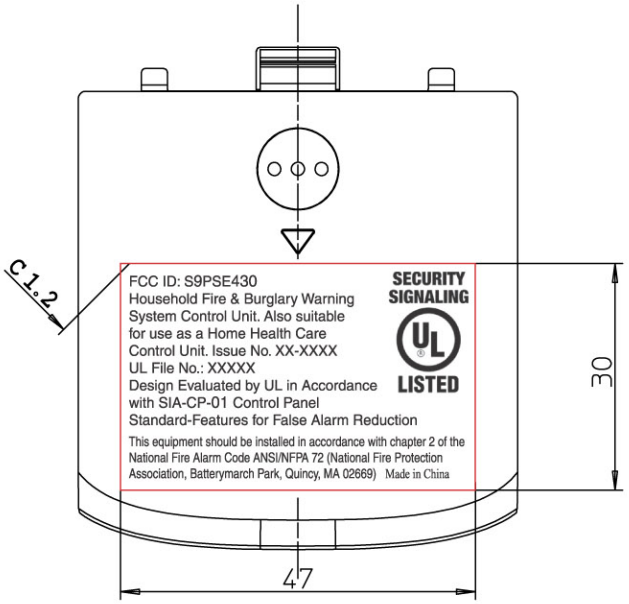
C 1.2
FCC ID: S9PSE430
Household Fire & Burglary Warning
System Control Unit. Also suitable
for use as a Home Health Care
Control Unit. Issue No. XX-XXXX
UL File No.: XXXXX
Design Evaluated by UL in Accordance
with SIA-CP-01 Control Panel
Standard-Features for False Alarm Reduction
This equipment should be installed in accordance with chapter 2 of the
National Fire Alarm Code ANSI/NFPA 72 (National Fire Protection
Association, Batterymarch Park, Quincy, MA 02669) Made in China
SECURITY
SIGNALING
UL
LISTED
30
47

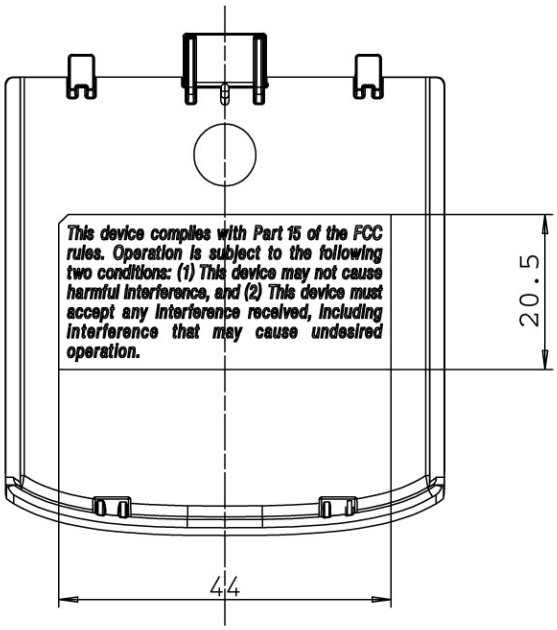
This device complies with Part 15 of the FCC
rules. Operation is subject to the following
two conditions: (1) This device may not cause
harmful interference, and (2) This device must
accept any interference received, including
interference that may cause undesired
operation.
20.5
44

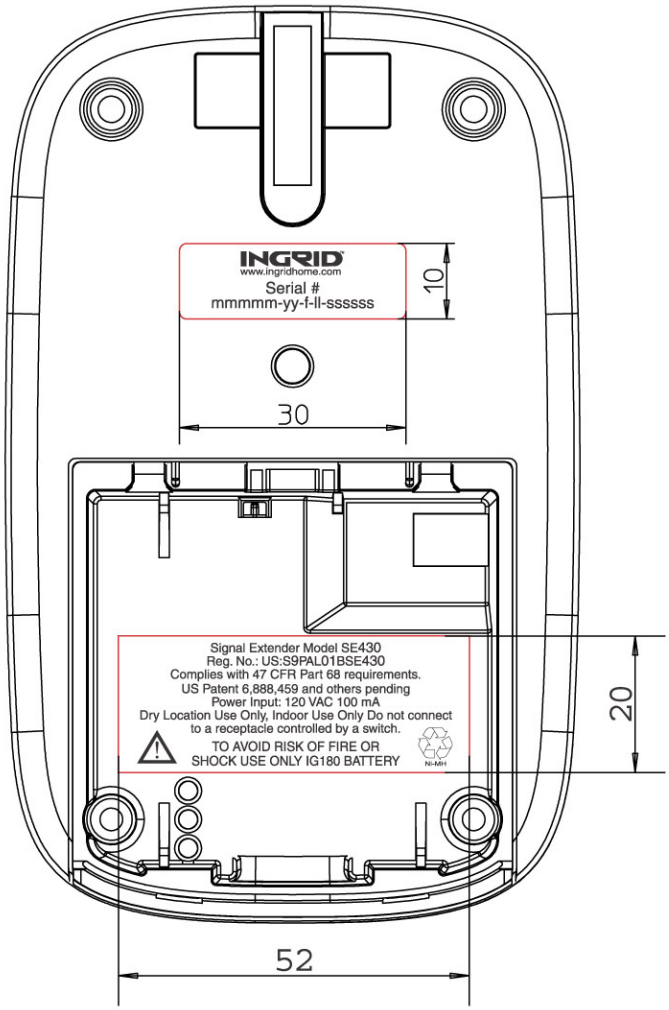
INGRID
www.ingridhome.com
Serial #
mmmmm-yy-f-ll-ssssss
10
30
Signal Extender Model SE430
Reg. No.: US:S9PAL01BSE430
Complies with 47 CFR Part 68 requirements.
US Patent 6,888,459 and others pending
Power Input: 120 VAC 100 mA
Dry Location Use Only, Indoor Use Only Do not connect
to a receptacle controlled by a switch.
TO AVOID RISK OF FIRE OR
SHOCK USE ONLY IG180 BATTERY
Ni-MH
20
52

Label Location

FCC ID: S9PSE430
July 5, 2005