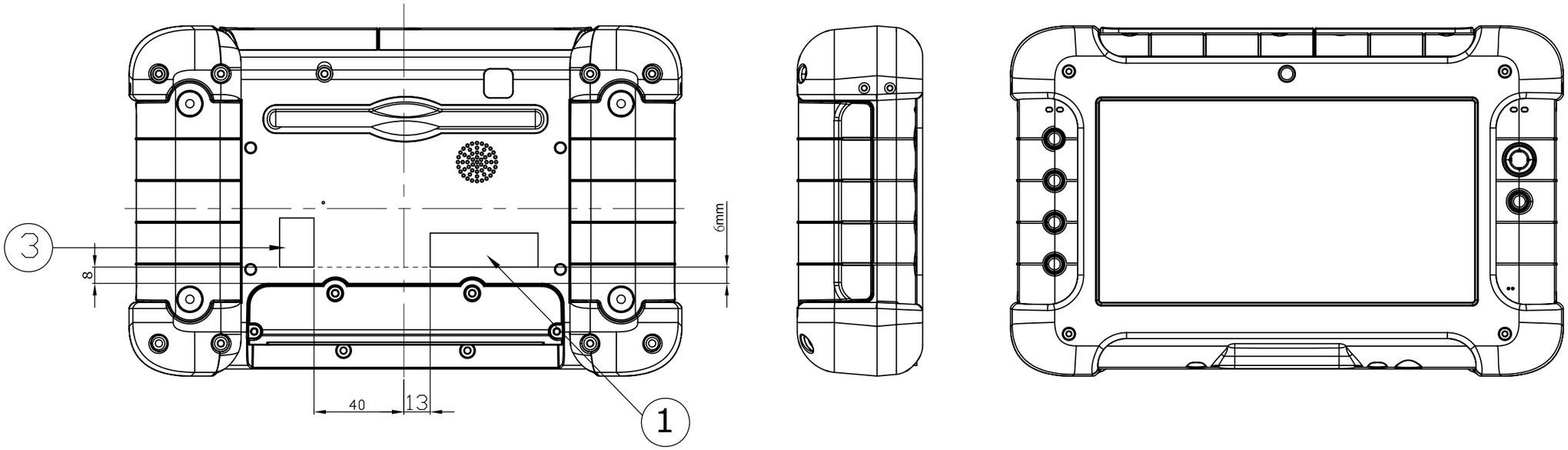

1 RATING,UMPQUA

3 WINDOWS VISTA,PREMIUM,VIO

ITEM	PART NO.	DESCRIPTION	Q'TY	REMARK
5	242819800001	TF1–NAMEPLATE; YUMA,UMPQUA	1	
4	241819800001	TF1–LOGO; TRIMBLE,UMPQUA	1	
3	242804480031	TF1–LABEL; WINDOWS VISTA,PREMIUM,VIO,8224DV	1	
2	242679900009	TF1–LABEL; BAR CODE,(25*10MM)*12pcs,8640C	1	IE Printing
1	242819800003	TF1–LABEL; RATING,UMPQUA	1	

ITEM	CONTENTS OF CHANGE	RVS	CHK	APV	M/D/Y
					/ /
					/ /
					/ /
					/ /
					/ /
					/ /

TOL± / RANGE	Pla	Met	Ins	Por	Cab	Pac	Gas	PCB
0~6	0.1	0.1	0.1	0.2	0.5	1	0.5	0.1
6~30	0.1	0.1	.15	.25	1	1	0.5	0.1
30~80	0.1	.15	0.2	0.3	2	1.5	1	0.1
80~180	.15	.15	.25	0.3	2	2	1	.15
180~315	.15	0.2	0.3	0.4	2.5	2	1	.15
315~800	0.2	0.3	0.4	0.5	3	3	2	.15

DATE	07-NOV-2008	MATERIAL	SEE NOTES	TREATMENT		REMARK	
UNIT	MM	SCALE	— —	DRAWING NAME	TF1-LABEL KIT;TRIMBLE,W/Z YUMA NAMEPLATE,UMPQUA		
DRAWN	DESIGNED	CHECKED	APPROVED	MATERIAL NO.	AD 451 8198 00031 R 00		

MiTAC Technology Corp.

SHEET No. 1 of 1