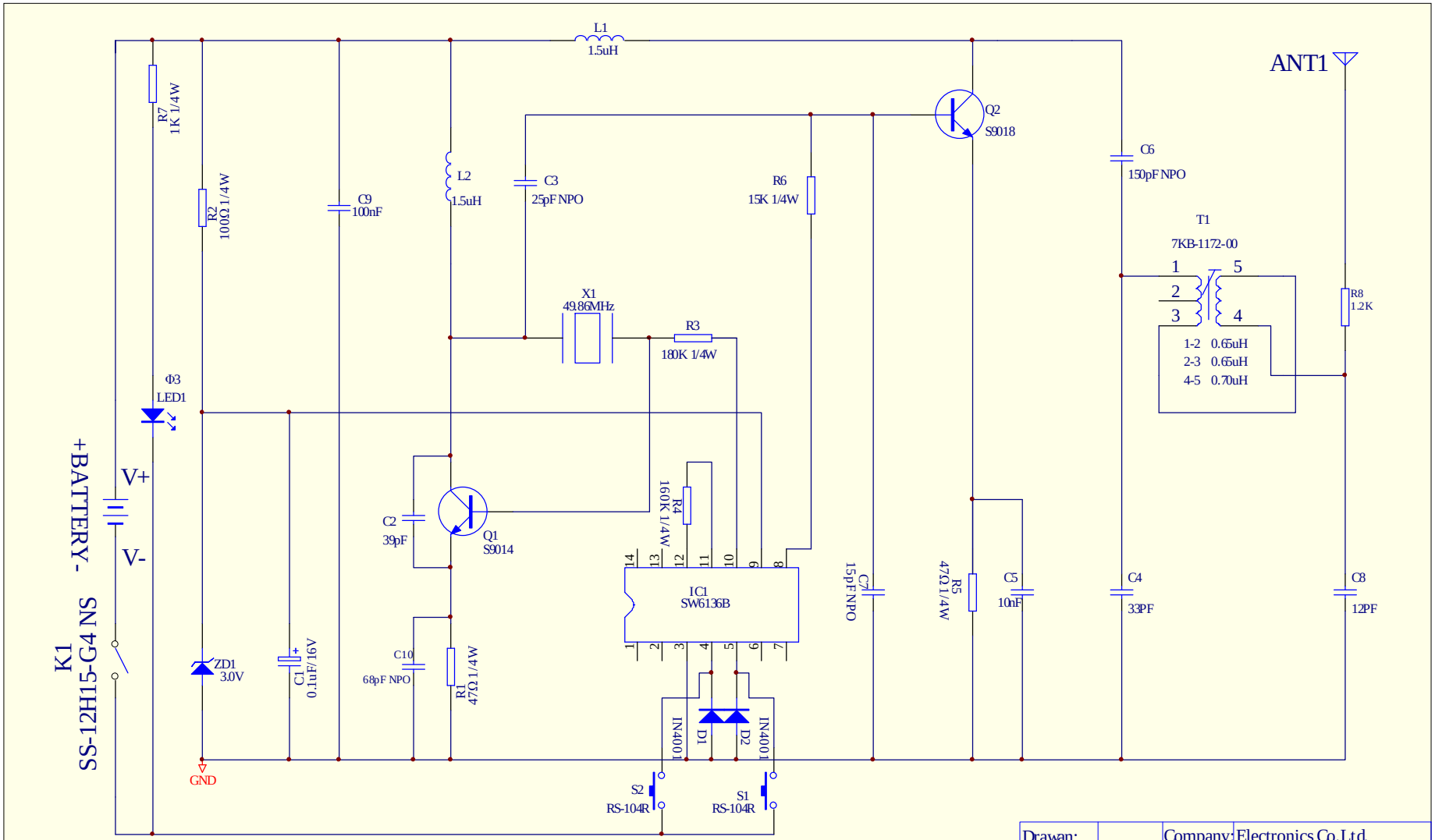

Drawan:		Company:	Electronics Co.Ltd.
Check:		Title:	R/C hand Shoot the electric
Approved:			
Eng:		File:	E:\design\RC HAND.ddb
Released:		Scale: 1:1	Date: 2006.06.27