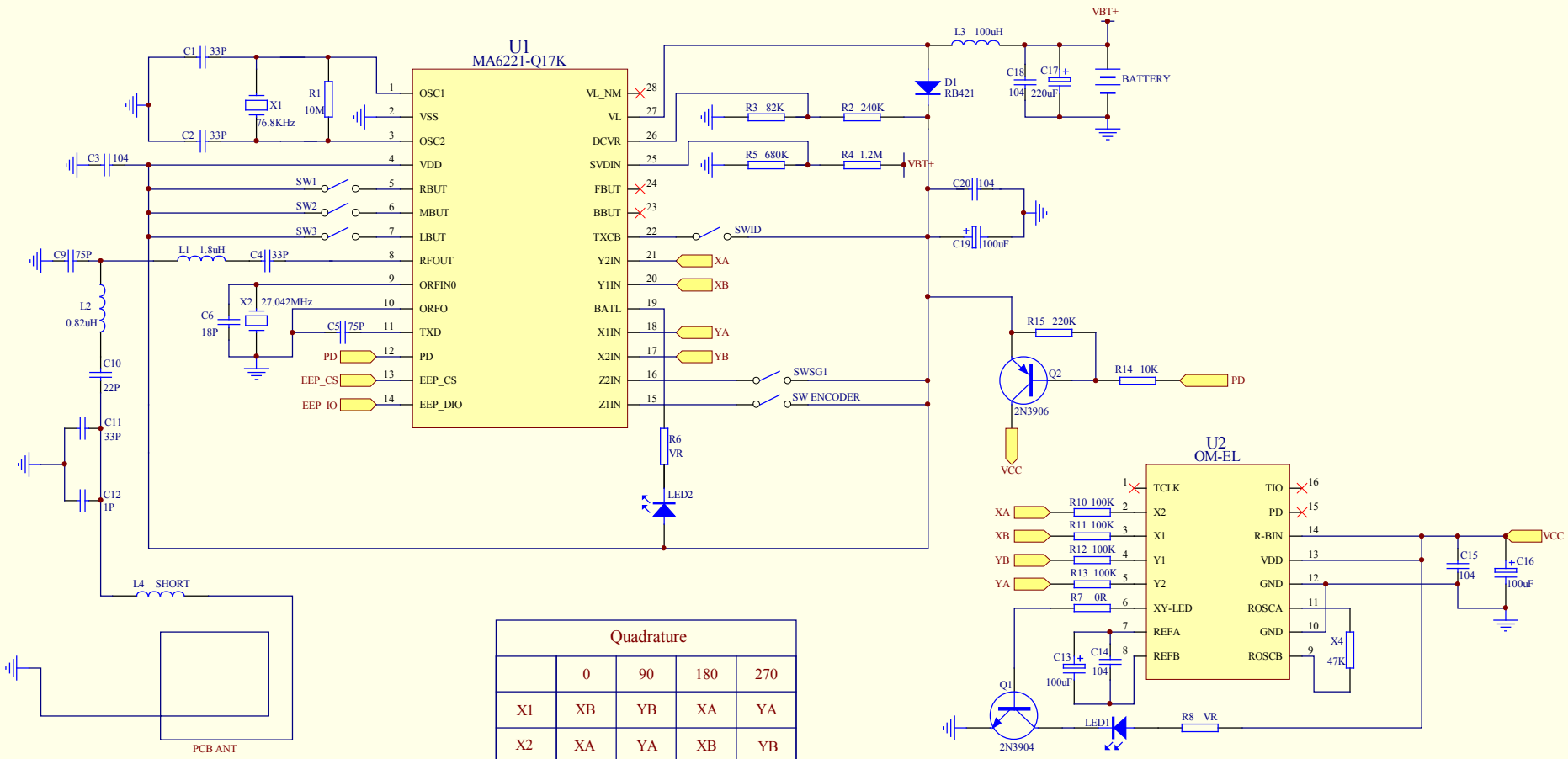

Quadrature				
	0	90	180	270
X1	XB	YB	XA	YA
X2	XA	YA	XB	YB
Y1	YB	XA	YA	XB
Y2	YA	XB	YB	XA

Title: OM-EL		
Size: B	Number: 1	Revision: V2.0
Date: 27-Dec-2004	Sheet of 1	
File: E:\PCBIA\4p\mouse.Ddb	Drawn By:	