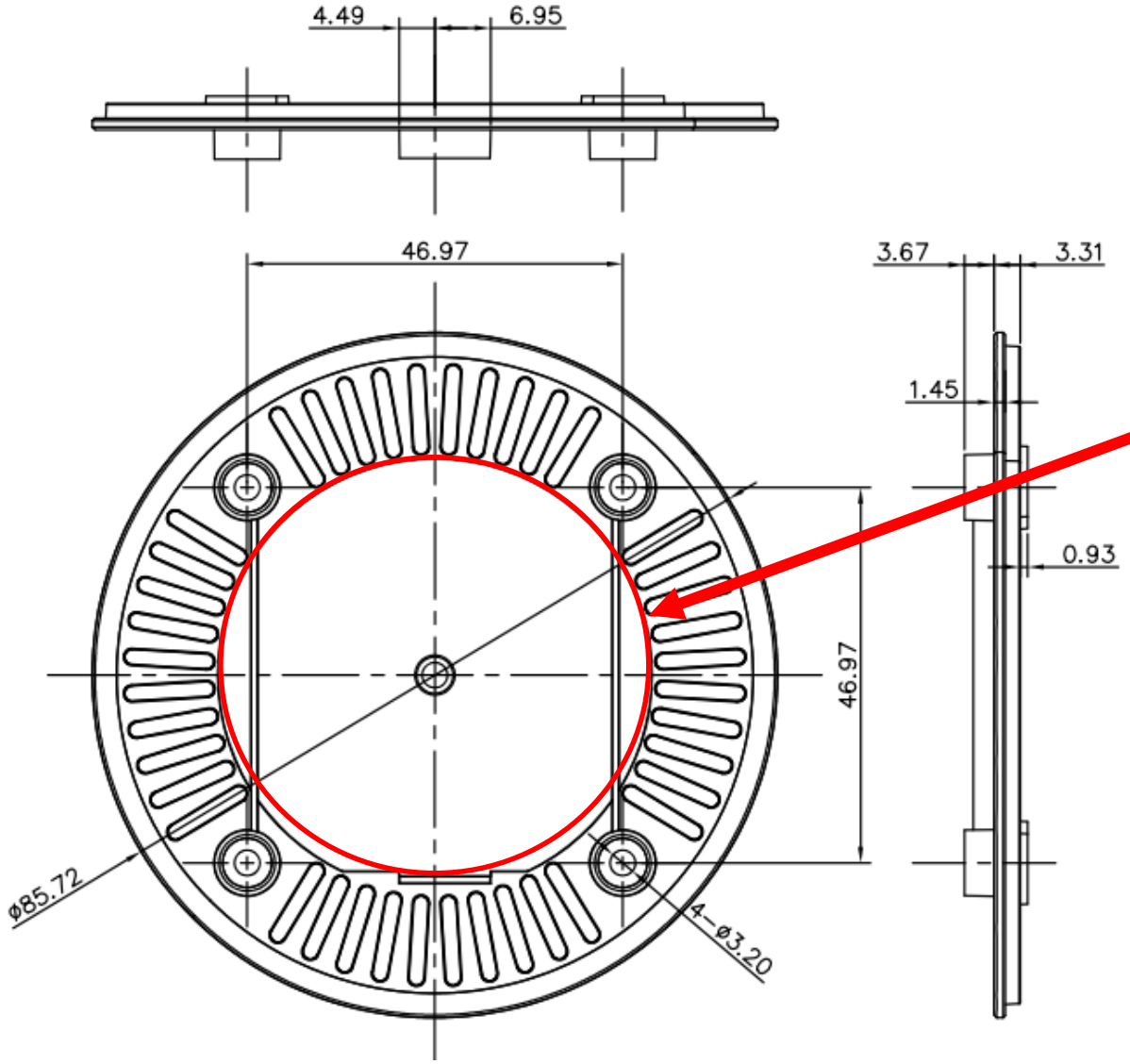
4.49
6.95
46.97
3.67
3.31
1.45
0.93
46.97
ø85.72
4-ø3.20

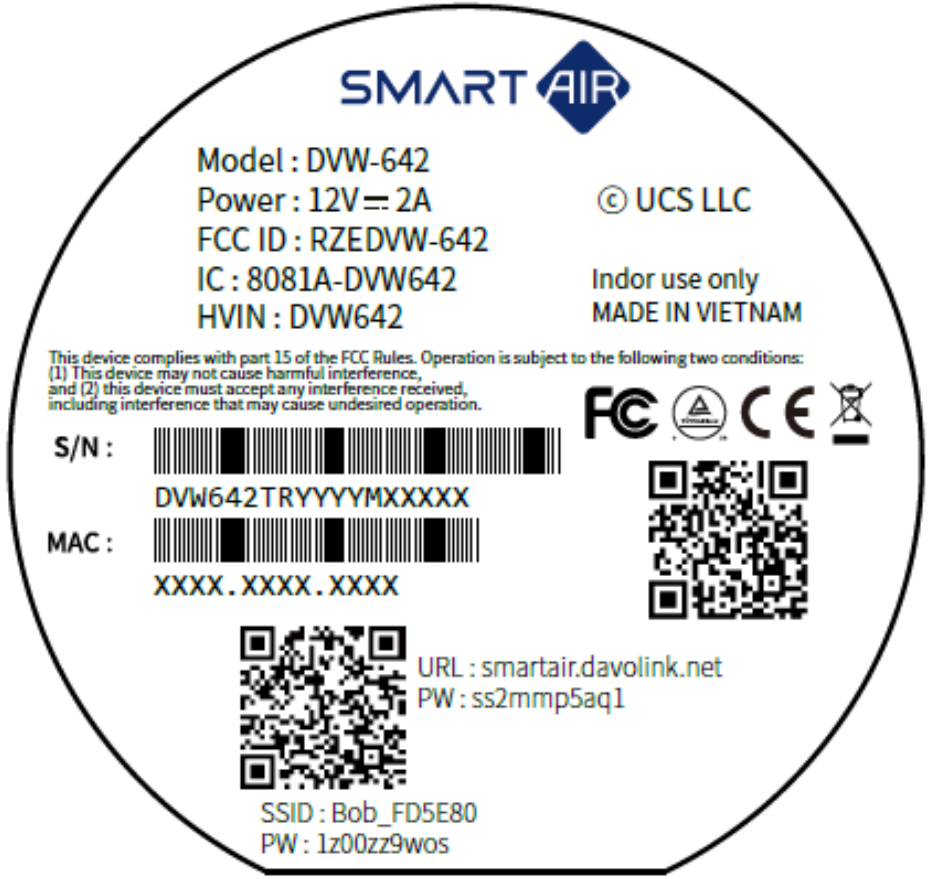
SMART AIR
Model : DVW-642
Power : 12V⎓2A
FCC ID : RZEDVW-642
IC : 8081A-DVW642
HVIN : DVW642
© UCS LLC
Indor use only
MADE IN VIETNAM
This device complies with part 15 of the FCC Rules. Operation is subject to the following two conditions:
(1) This device may not cause harmful interference,
and (2) this device must accept any interference received,
including interference that may cause undesired operation.
S/N :
DVW642TRYYYYMXXXXX
MAC :
XXXX.XXXX.XXXX
URL : smartair.davolink.net
PW : ss2mmp5aq1
SSID : Bob_FD5E80
PW : 1z00zz9wos

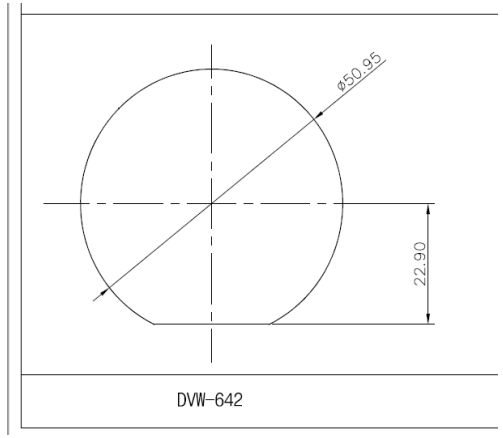
ø50.95
22.90
DVW-642