Lauberhorn C1 (C1L)

Differences between actual version PS1 and new version PS3

We herby apply for class II permissive change of FCC ID: RX2C1L due to the following changes:

1) Added "smart reset" circuit

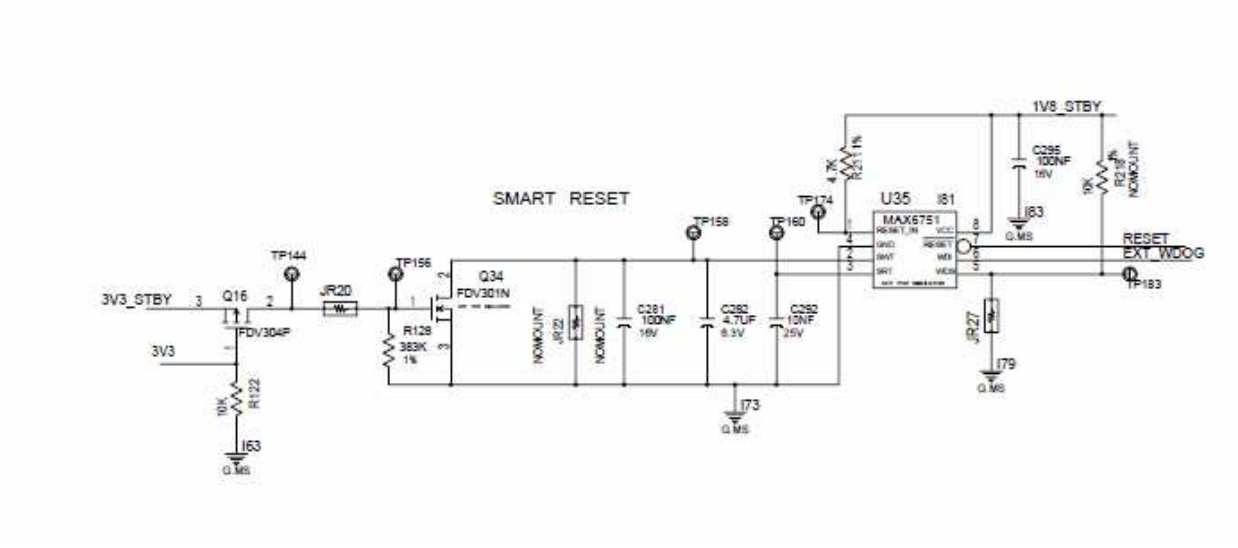

2) Added components (various parts):

JR51
JR54
JR23

3) Component modifications:

D15 changed to JR11
C205 changed to R280

Sincerely,

Magneti Marelli S.p.A.

Magneti Marelli S.p.A.
Electronic Systems
Centro Ricerca e Sviluppo
Viale Carlo Emanuele II, 150
10078 Venaria (Torino)
Tel. +39 011 68 79 111
Fax +39 011 6879199

Sede Legale:
Viale Aldo Borletti 61/63
20011 Corbetta (MI)
Cap. Soc. Euro 254.325.965 i.v.
Reg. Imp. Milano, Cod. Fisc.
e P. IVA 08082990014
R.E.A. Milano n. 1657773
Iscrizione UIC n. 40047
Direzione e coordinamento ex art.
2497 c.c. Fiat S.p.A.