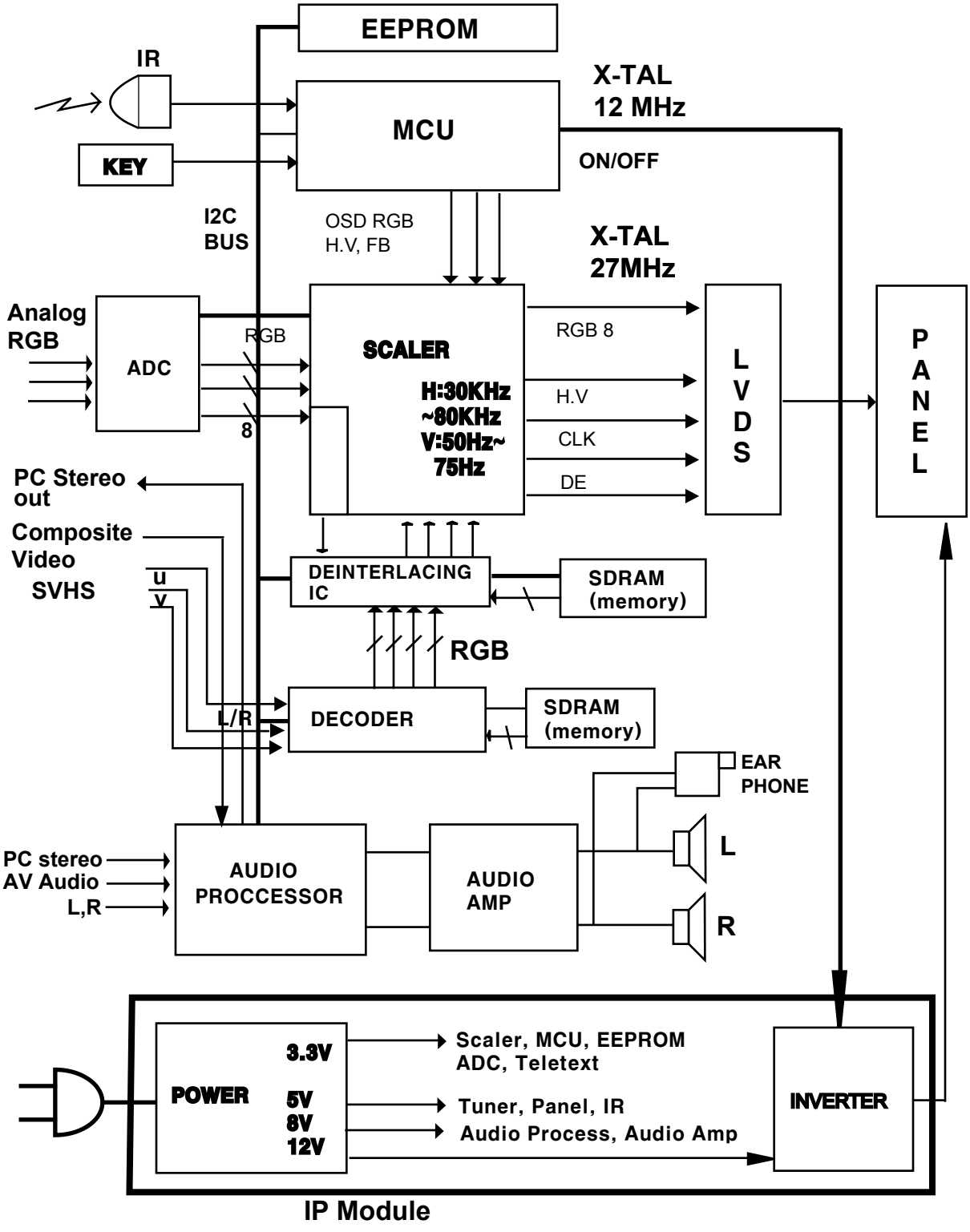BLOCK DIAGRAM FOR LS3200