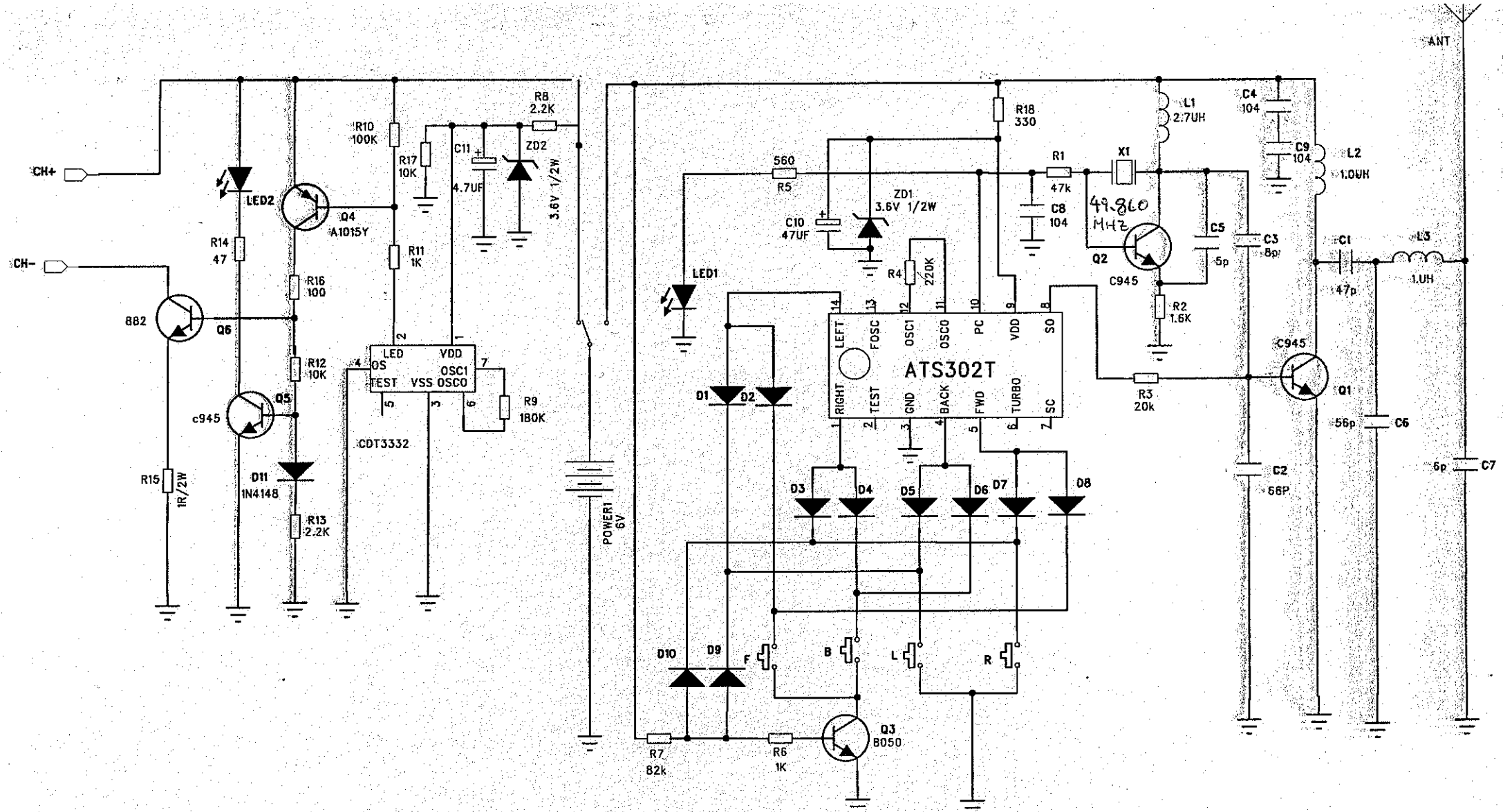

COMPANY:	SINTECH TOYS MANUFACTURING LIMITED			
DRAWN:	LIAO FU LIN	PRODUCT NAME:	AUPER MINI CAR	
CHECK:	LIAO FU LIN	PRODUCT NO:		
APPROVED:	ZHANG YI MIN	TITE:	TX SCH 49.860MHz	
END:	ZHANG YI MIN	SCH NO:	0402T27	REV
RELEASED:	ZHANG YI MIN	DATE:	2004 12 23	PP 1.0

¥R¹¢¤u.ô°è³æ49M05.4.18.sch-1 - Wed Apr 27 16:01:57 2005