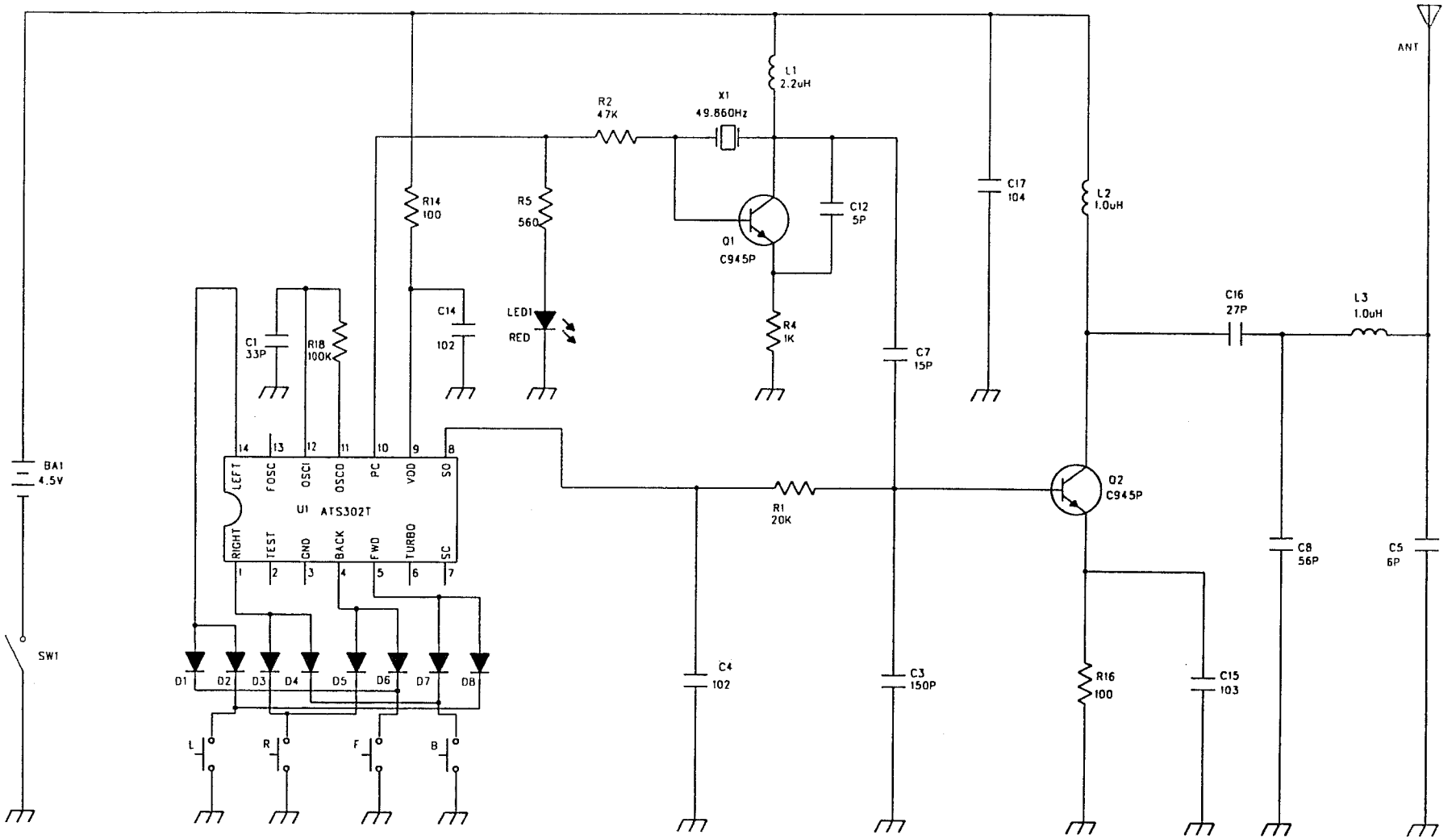

DRAWN:	HAN JUN GANG	COMPANY: ZINTECH TOYS LIMITED	
CHECK:	Zhang Yi Min		
APPROVED:	Zhang Yi Min	TITLE: 0321TX 49MHz	REV: FCC 1.1
ENG:	Zhang Yi Min		
RELEASED:	Zhang Yi Min	SCALE: 2:1	DATE: DEC-01-2003