REV.	MODIFIED DES	BY:/DATE	APR./DATE
1.0	INITAL RELEASE		

TX Circuit Diagram

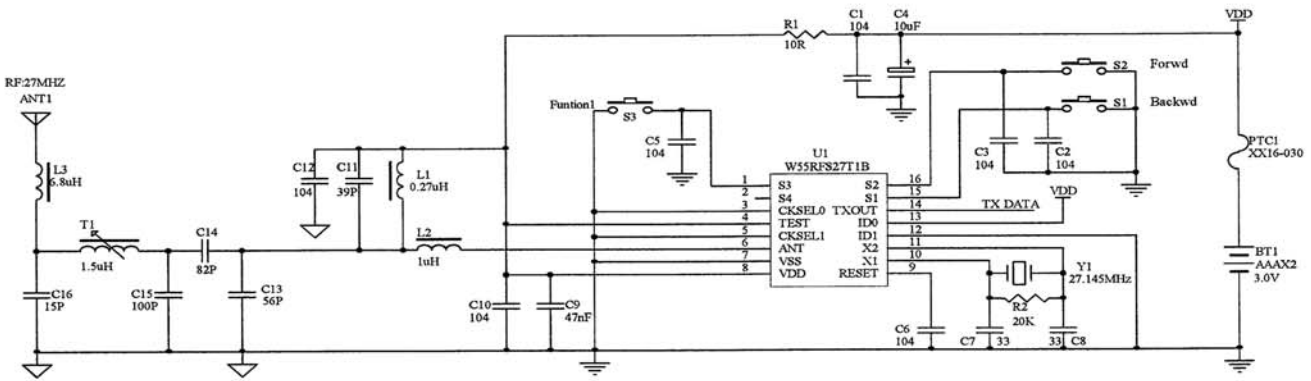

FORWARD WINSOME IND. LTD.				
PROJECT NO.: A8308	PART NO.: A8308*405020		DRN. BY: HL REN	DATE: 1/13/2014
PROJECT NAME	PART NAME: A8308 TX		CKD. BY: WJ Lai	DATE: 1/13/2014
TOLERANCES UNLESS OTHERWISE SPECIFIED	PROJECTION:	SCALE: 1 : 1 / UNIT mm / MAT'L 94HB 1.6th	APVD.BY: WJ Lai	DATE: 1/13/2014
X=+/-0.5 X.X=+/-0.1 X.XX=+/-0.04		DWG.NO.: ENG-LAA8308-20	REV.: 08	SHEET NO.: 1 OF 1