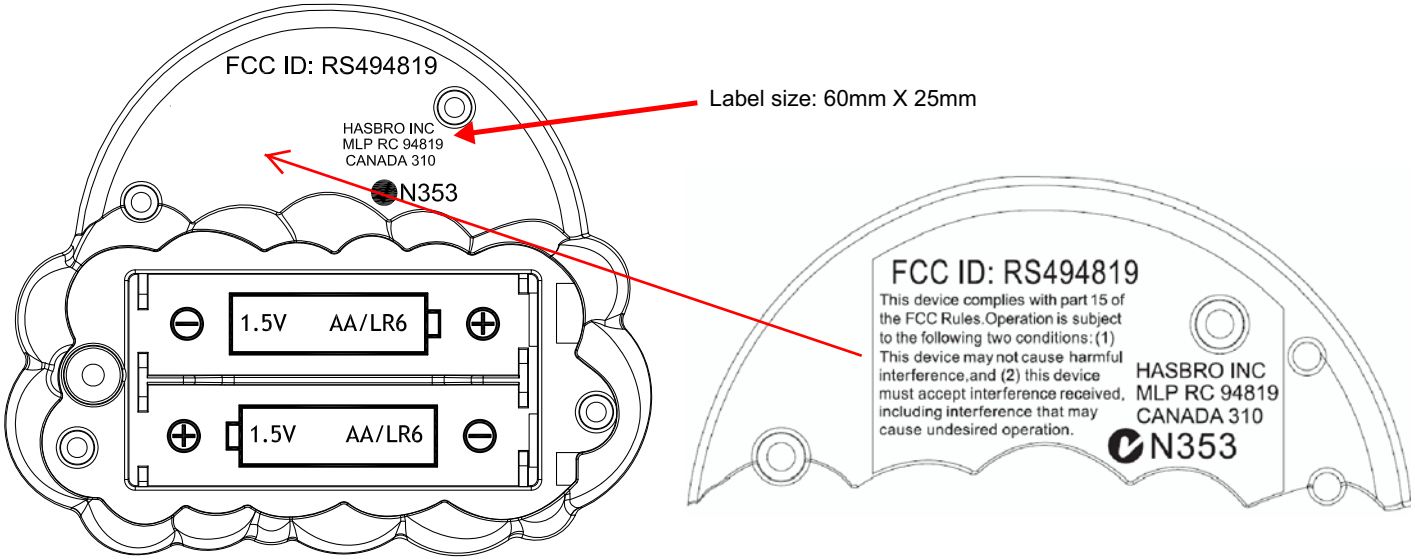
FCC ID: RS494819
HASBRO INC
MLP RC 94819
CANADA 310
N353
1.5V AA/LR6
1.5V AA/LR6
Label size: 60mm X 25mm
FCC ID: RS494819
This device complies with part 15 of the FCC Rules.Operation is subject to the following two conditions: (1) This device may not cause harmful interference,and (2) this device must accept interference received, including interference that may cause undesired operation.
HASBRO INC
MLP RC 94819
CANADA 310
N353

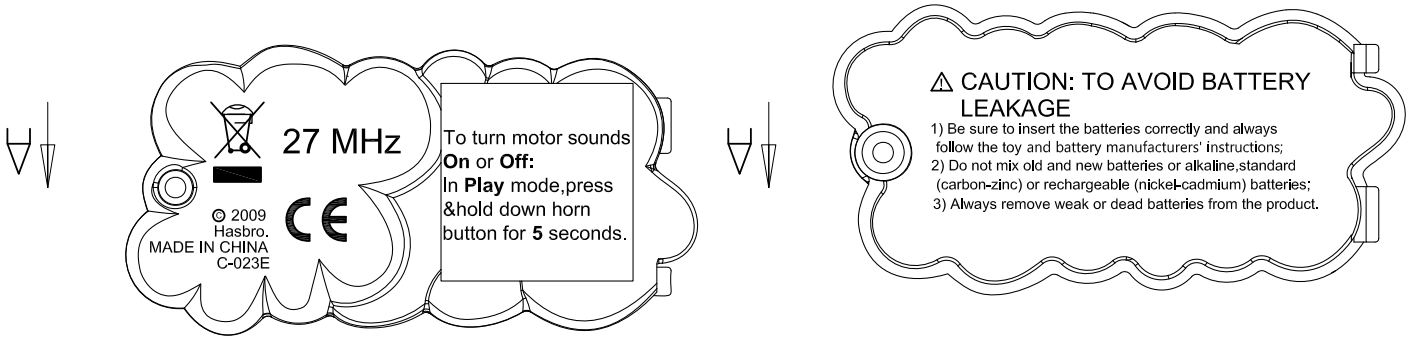
27 MHz
© 2009
Hasbro.
MADE IN CHINA
C-023E
To turn motor sounds **On** or **Off:**
In **Play** mode,press &hold down horn button for **5** seconds.
⚠ CAUTION: TO AVOID BATTERY LEAKAGE
1) Be sure to insert the batteries correctly and always follow the toy and battery manufacturers' instructions;
2) Do not mix old and new batteries or alkaline,standard (carbon-zinc) or rechargeable (nickel-cadmium) batteries;
3) Always remove weak or dead batteries from the product.