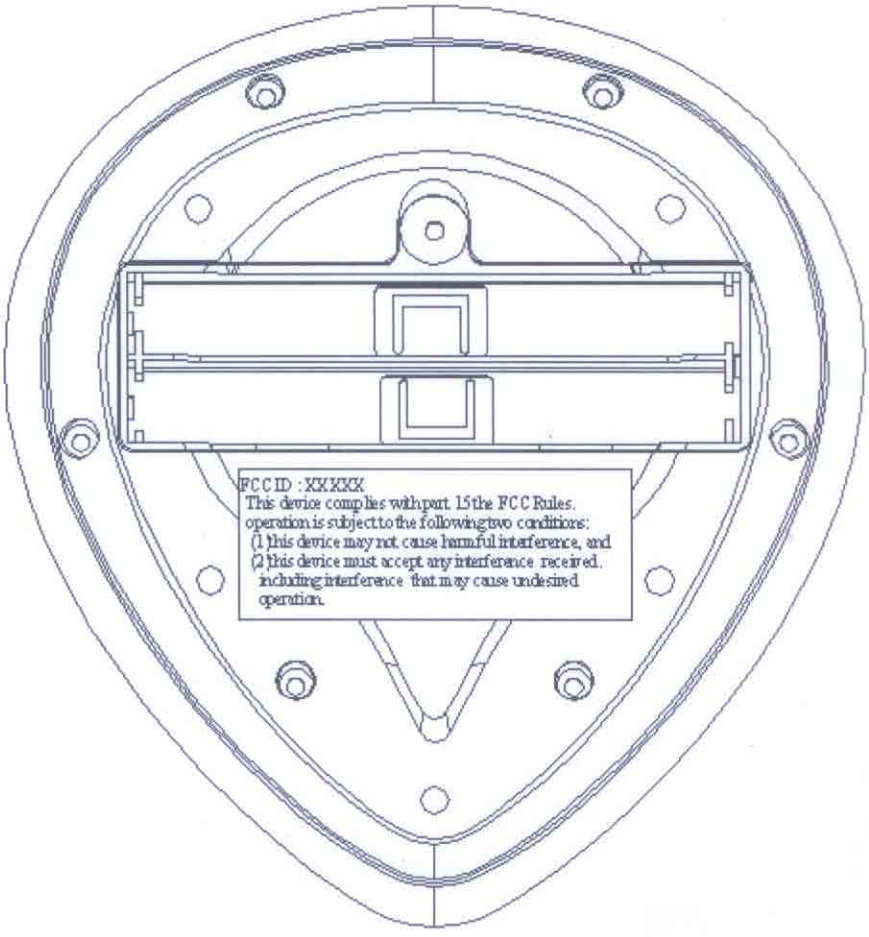
FCC ID : XXXXX
This device complies with part 15 the FCC Rules.
operation is subject to the following two conditions:
(1)this device may not cause harmful interference, and
(2)this device must accept any interference received.
including interference that may cause undesired
operation.

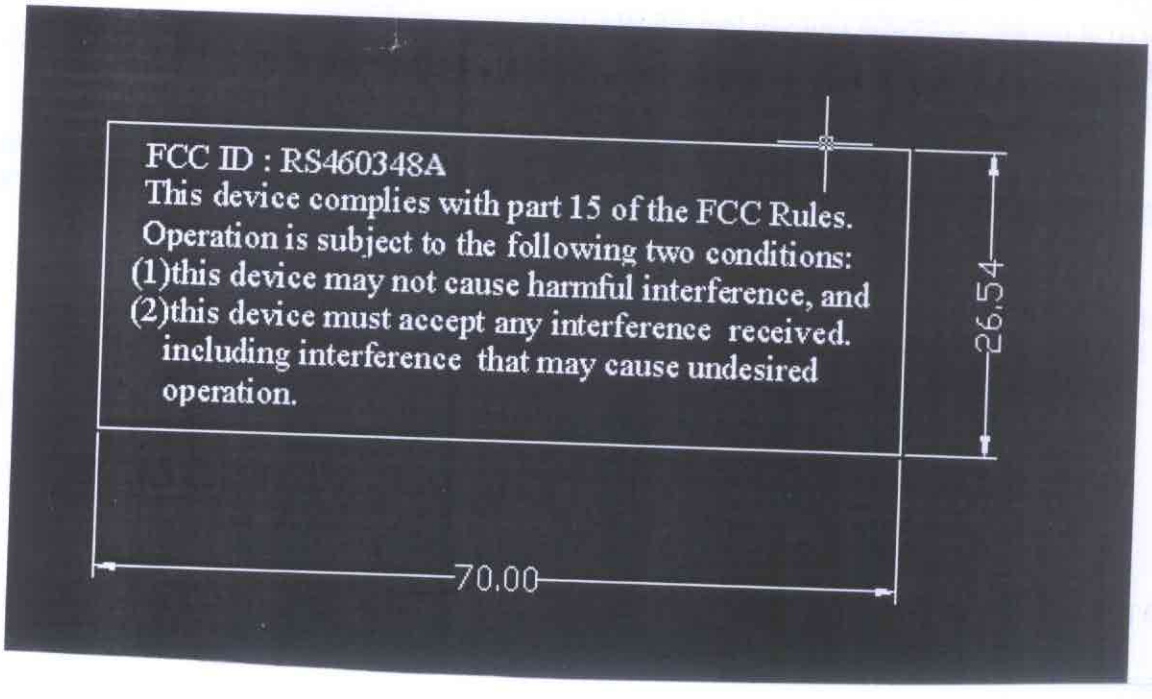
FCC ID : RS460348A
This device complies with part 15 of the FCC Rules.
Operation is subject to the following two conditions:
(1)this device may not cause harmful interference, and
(2)this device must accept any interference received.
including interference that may cause undesired
operation.
26.54
70.00

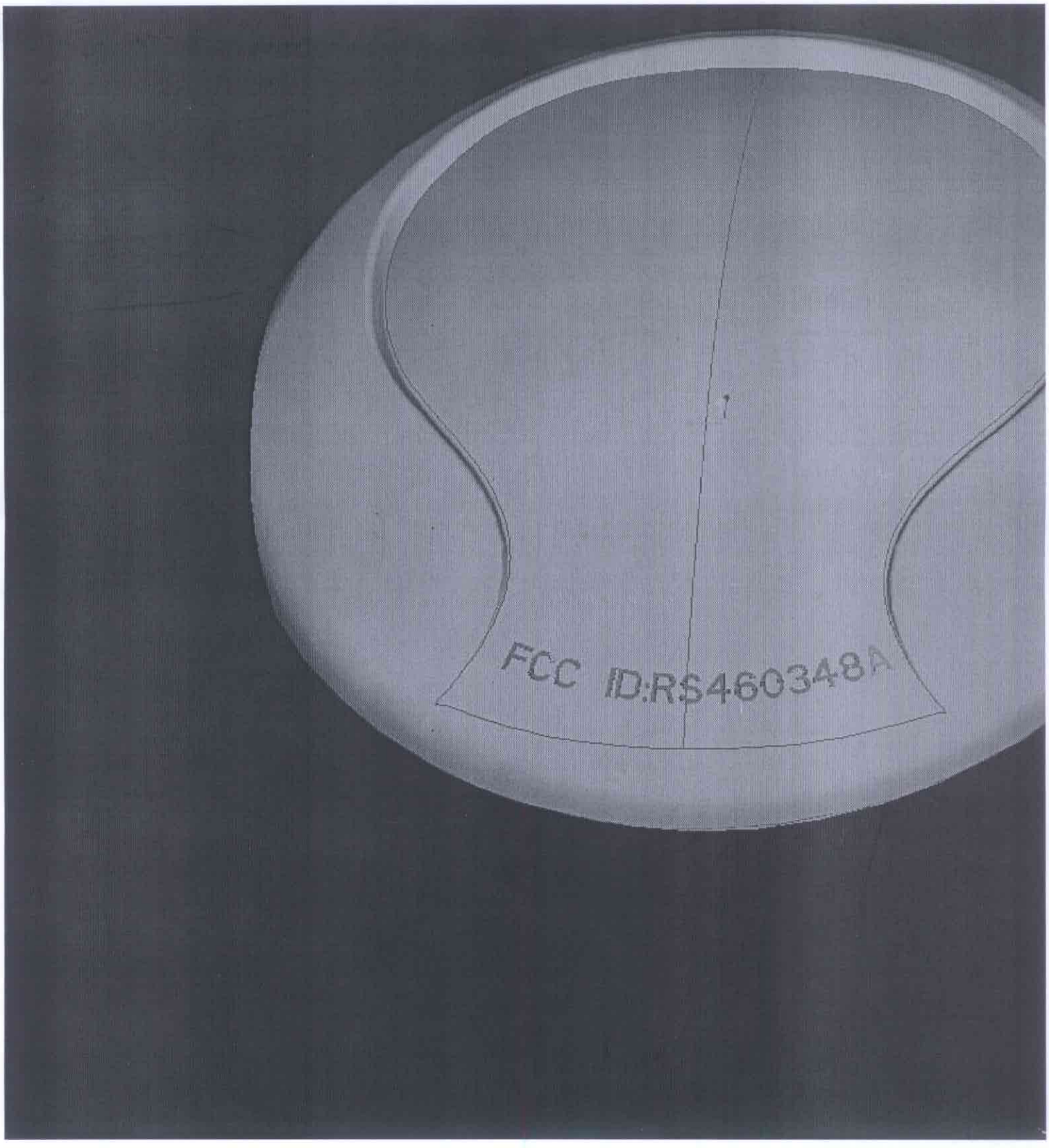

Text Height : 1.1 mm