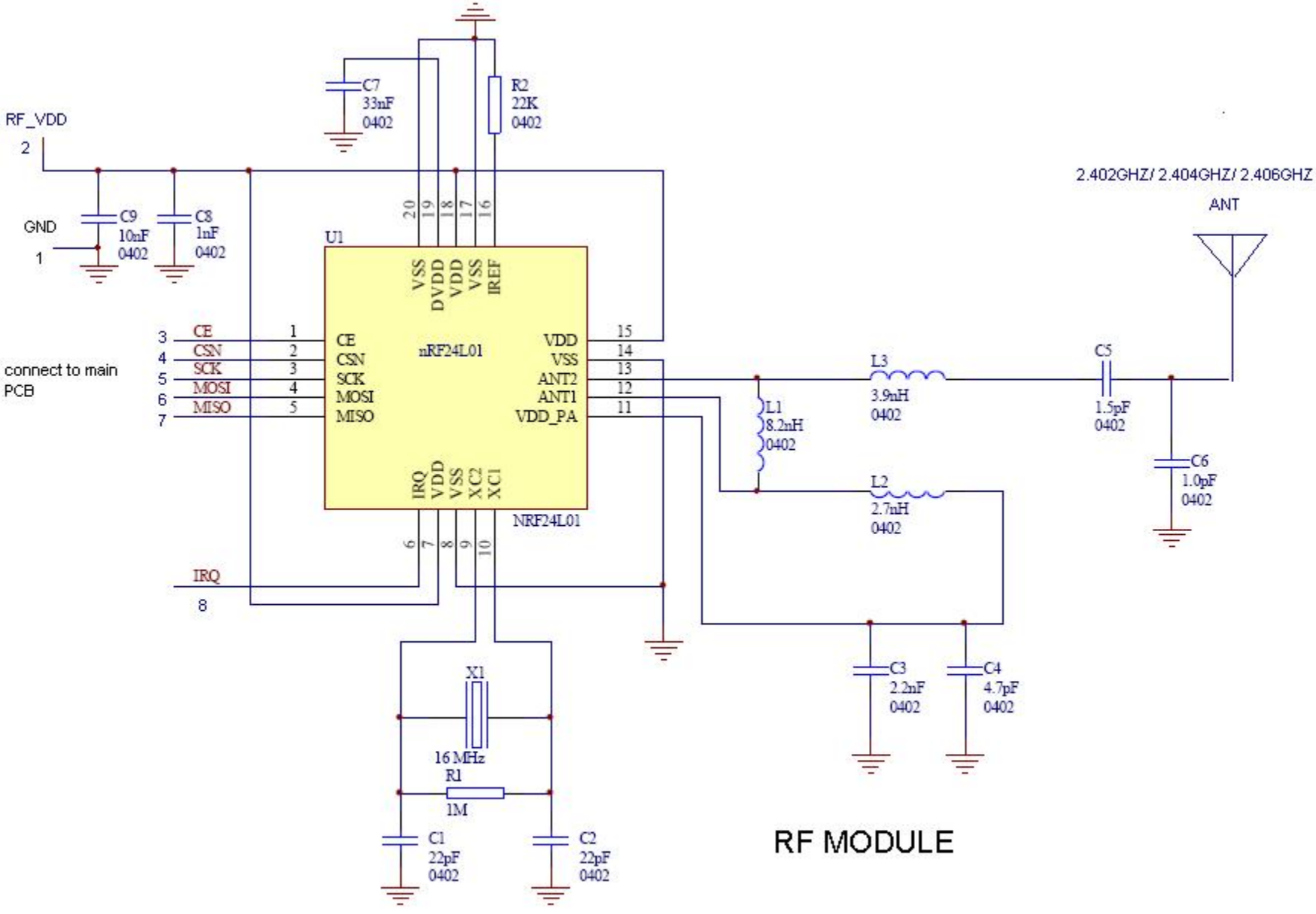

RF MODULE

model: 77928

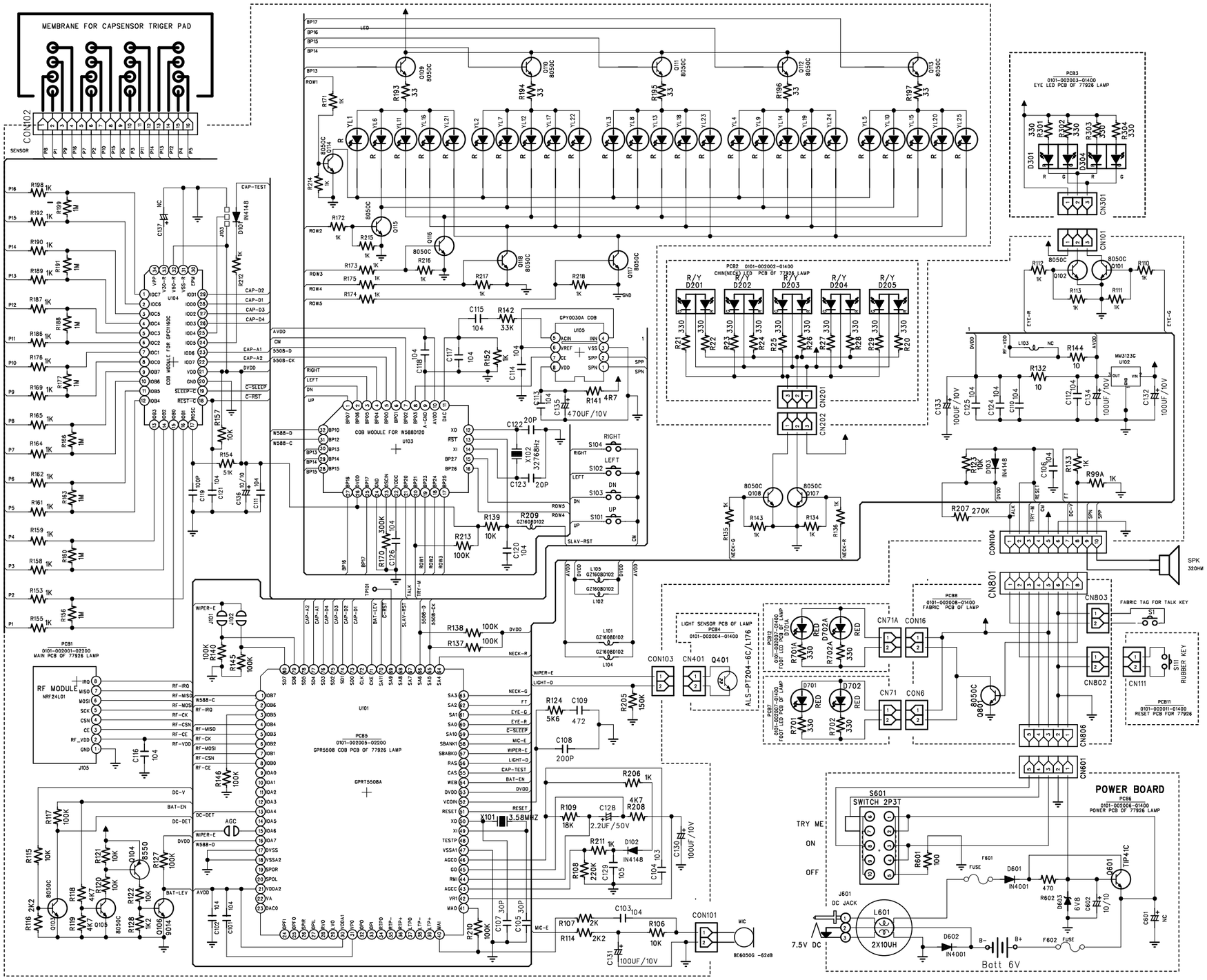

Master Model No. :77928

CHANGES	NO.	** FUNCTION OPTION **

*** REMARK ***

*.KRA107M — R1=10K R2=47K

*.KRC102M — R1=10K R2=10K

*.KRC111M — R1=10K

SCALE	UNIT	DRAWN: Chou Lei Mou	SCHEMATIC DIAGRAM
N / S		CHECKED: P. K.LAM	MODEL: HASBRO 77928
美好電子有限公司 MUSICAL ELECTRONICS LTD.		APPROVED:	FILE: 2 0 0 8 0 4 0 2