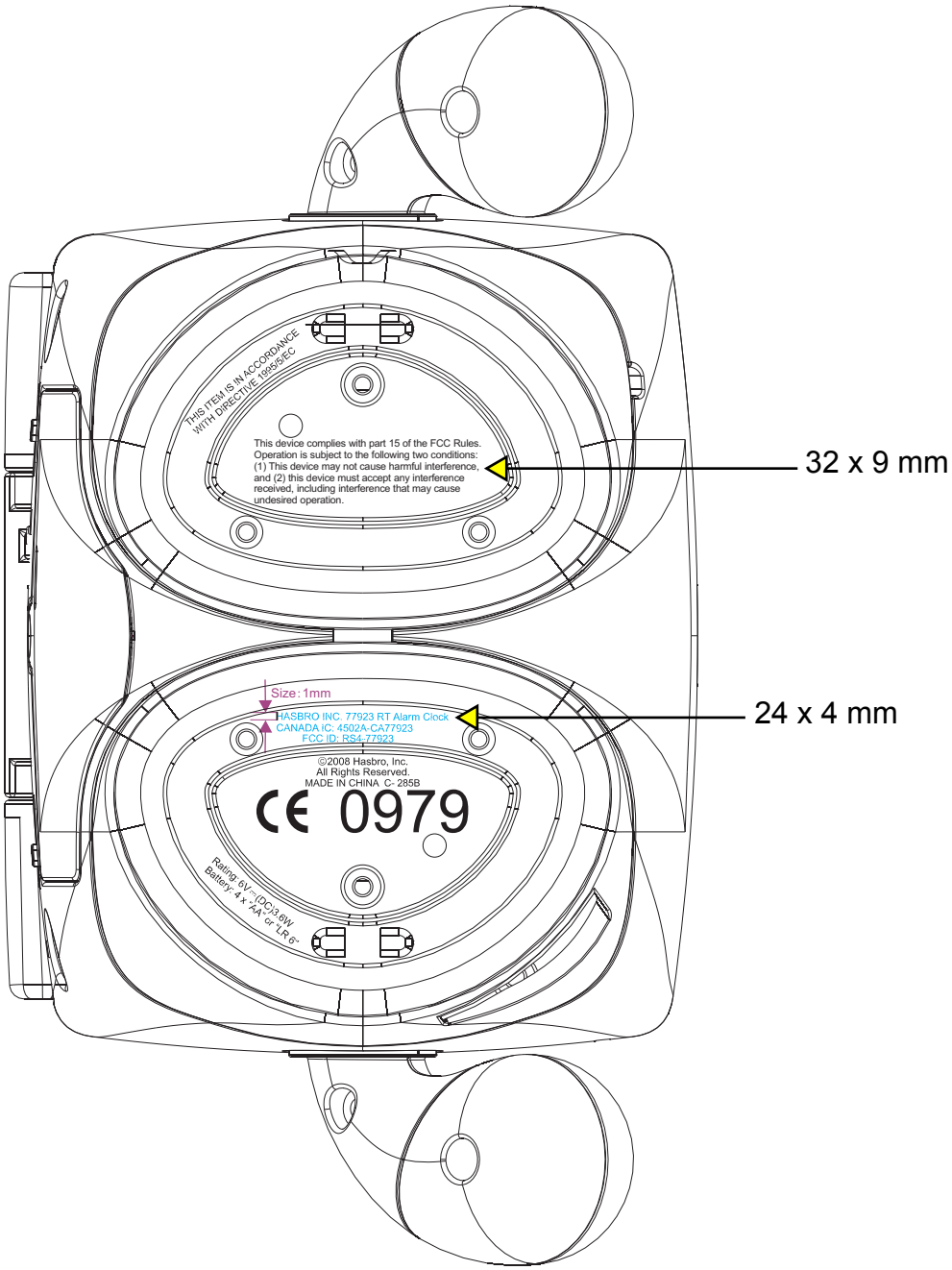
THIS ITEM IS IN ACCORDANCE
WITH DIRECTIVE 1999/5/EC
This device complies with part 15 of the FCC Rules.
Operation is subject to the following two conditions:
(1) This device may not cause harmful interference,
and (2) this device must accept any interference
received, including interference that may cause
undesired operation.
32 x 9 mm
Size: 1mm
HASBRO INC. 77923 RT Alarm Clock
CANADA IC: 4502A-CA77923
FCC ID: RS4-77923
24 x 4 mm
©2008 Hasbro, Inc.
All Rights Reserved.
MADE IN CHINA C- 285B
CE 0979
Rating: 6V~ (DC) 3.6W
Battery: 4 x "AA" or "LR 6"