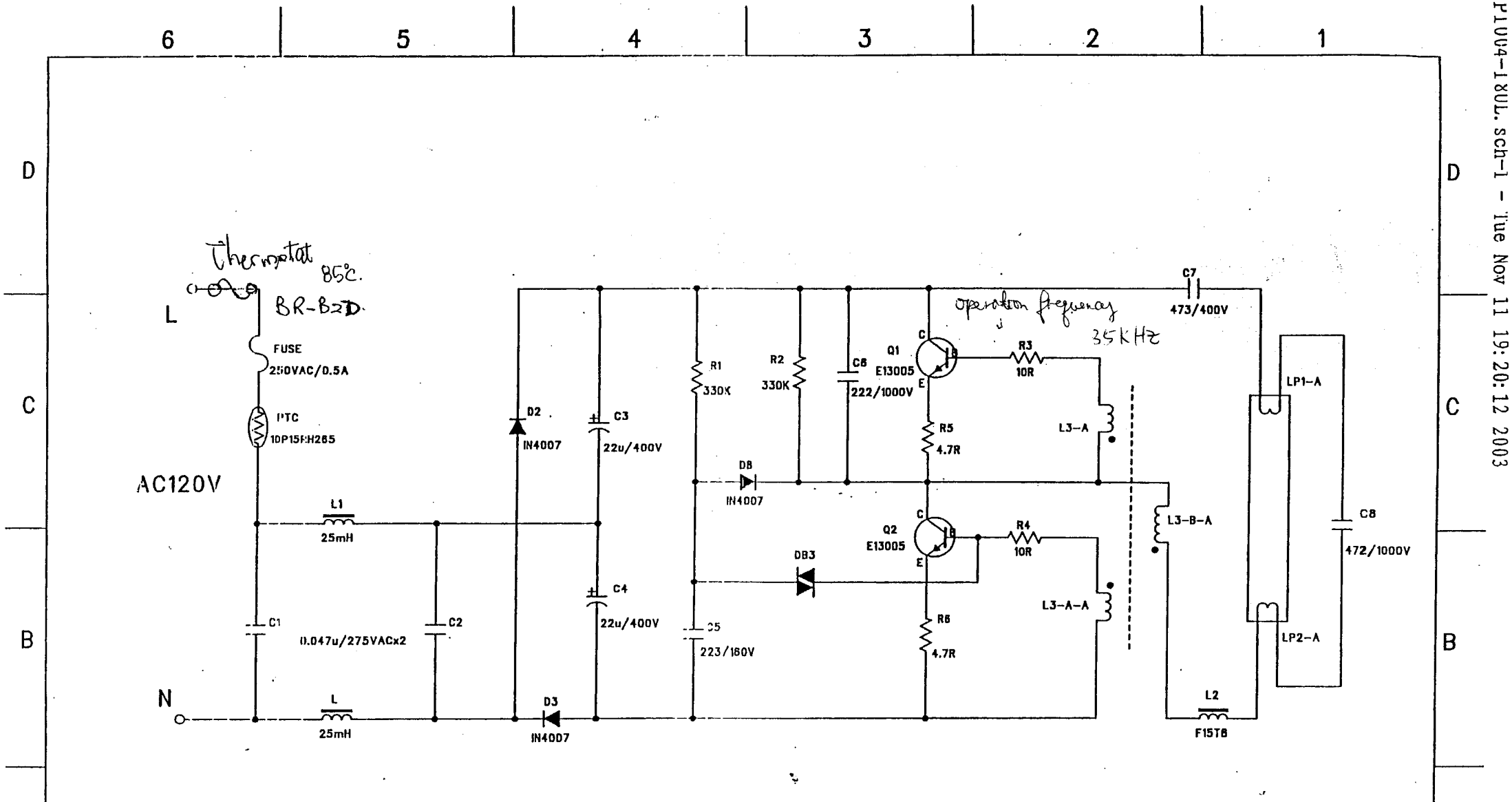


ITS comment: (D-1) morph lamp IA

| Philand Enterprises LTD | | | |
|---|---|---|---|
| TITLE | PI-004-18"UL | DRW | |
| REV | v1.0 | CHK | |

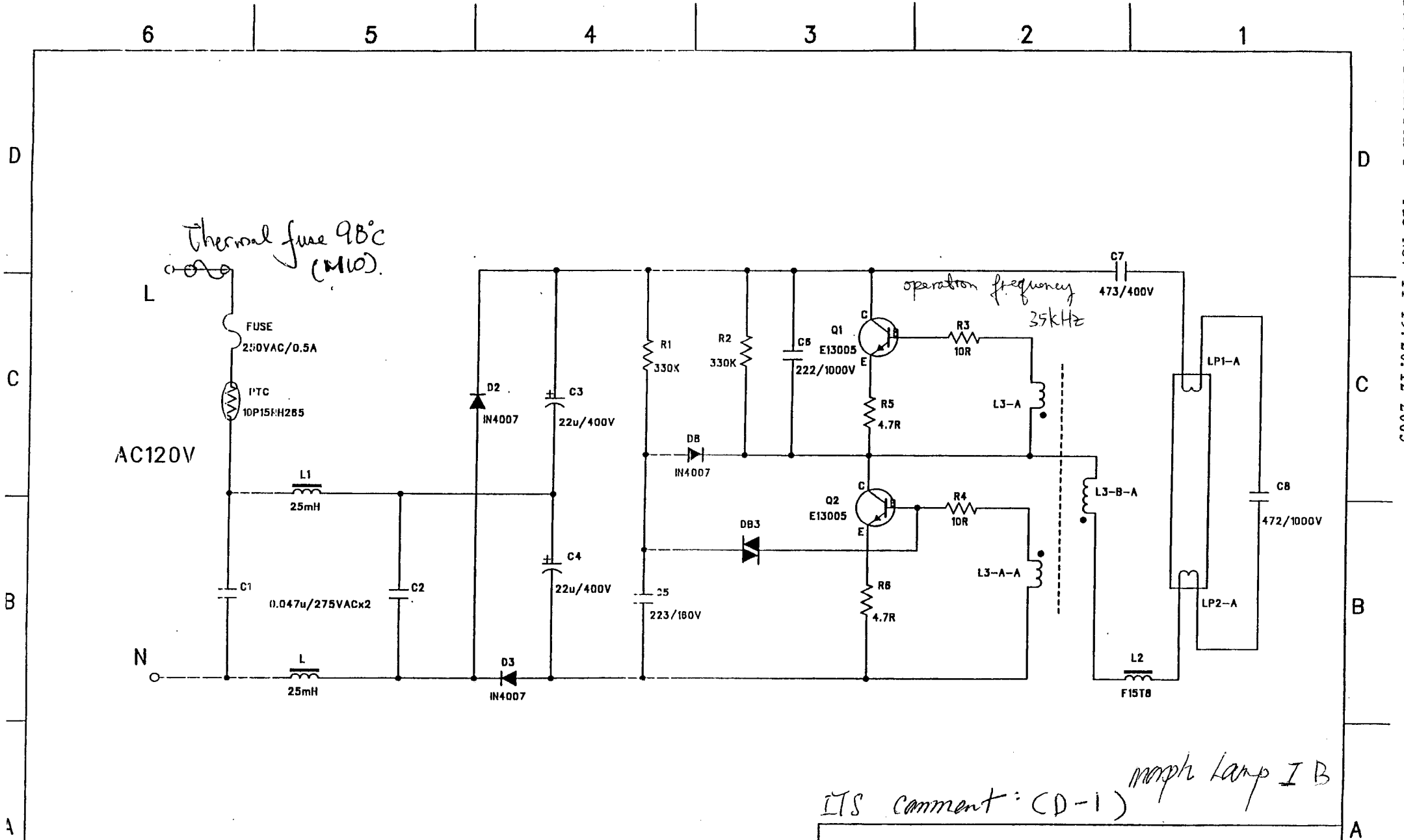
6
5
4
3
2
1
D
C
B
A
Thermal fuse 98°C
(M10).
L
N
FUSE
250VAC/0.5A
PTC
10P15NH265
AC120V
L1
25mH
L
25mH
C1
0.047u/275VACx2
C2
D2
IN4007
D3
IN4007
C3
22u/400V
C4
22u/400V
R1
330K
R2
330K
D8
IN4007
C5
223/160V
C6
222/1000V
DB3
Q1
E13005
Q2
E13005
R3
10R
R4
10R
R5
4.7R
R6
4.7R
operation frequency
35kHz
C7
473/400V
L3-A
L3-B-A
L3-A-A
LP1-A
LP2-A
C8
472/1000V
L2
F15T8
ITS comment: (D-1)
mph Lamp I B
Philand Enterprises LTD
TITLE
PI-004-18"UL
DRW
REV
v1.0
CHK