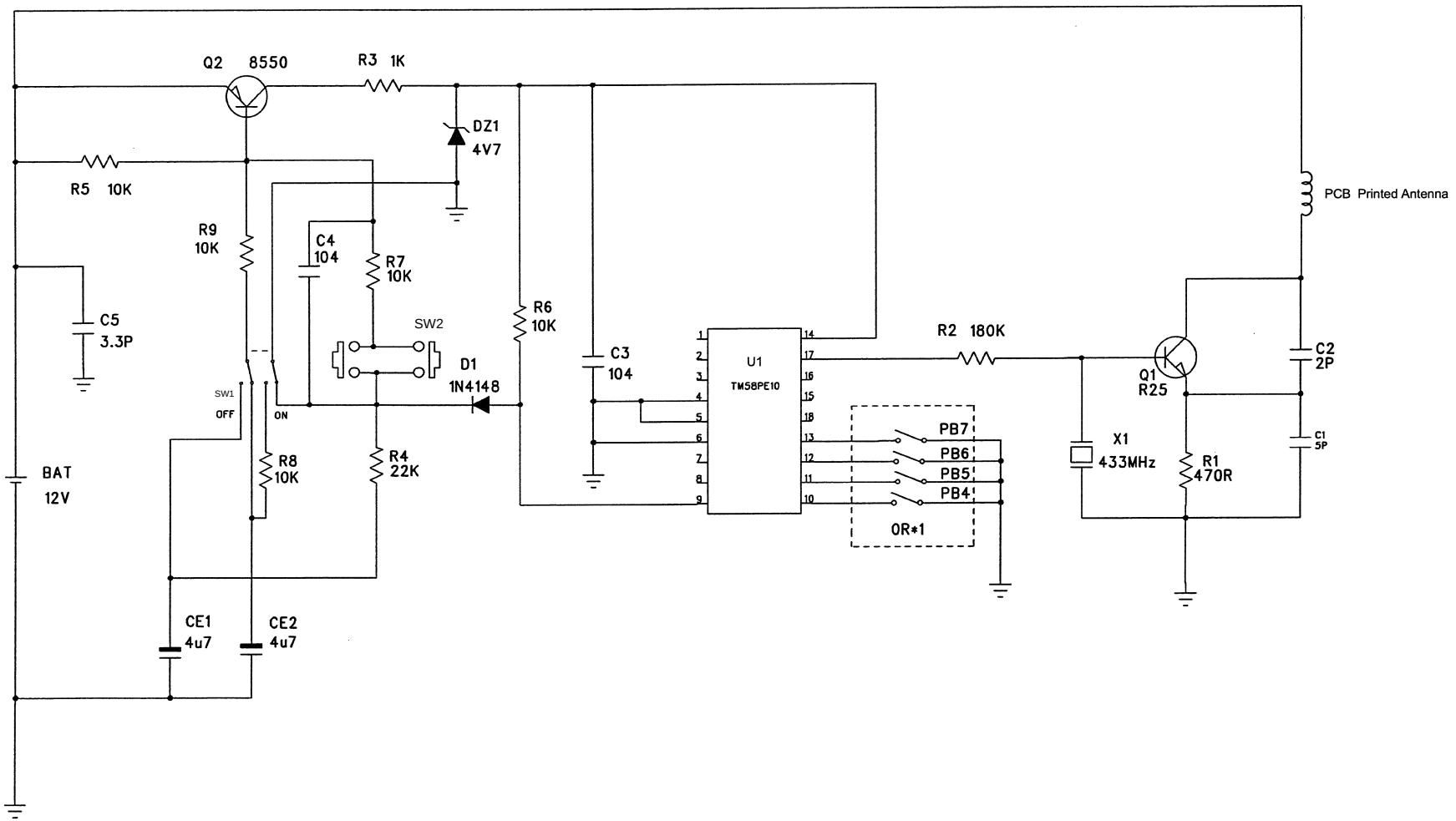

COMPANY: Soundforce Development Ltd.			
TITLE: Tour Alarm 2008-8-21			
DRAWN	Tanke	DWG NO:	FILE NAME:
CHECKED		MODEL:SF6207TX	VER:1.0
APPROVE		SHEET: 1 OF 1	SIZE:A3