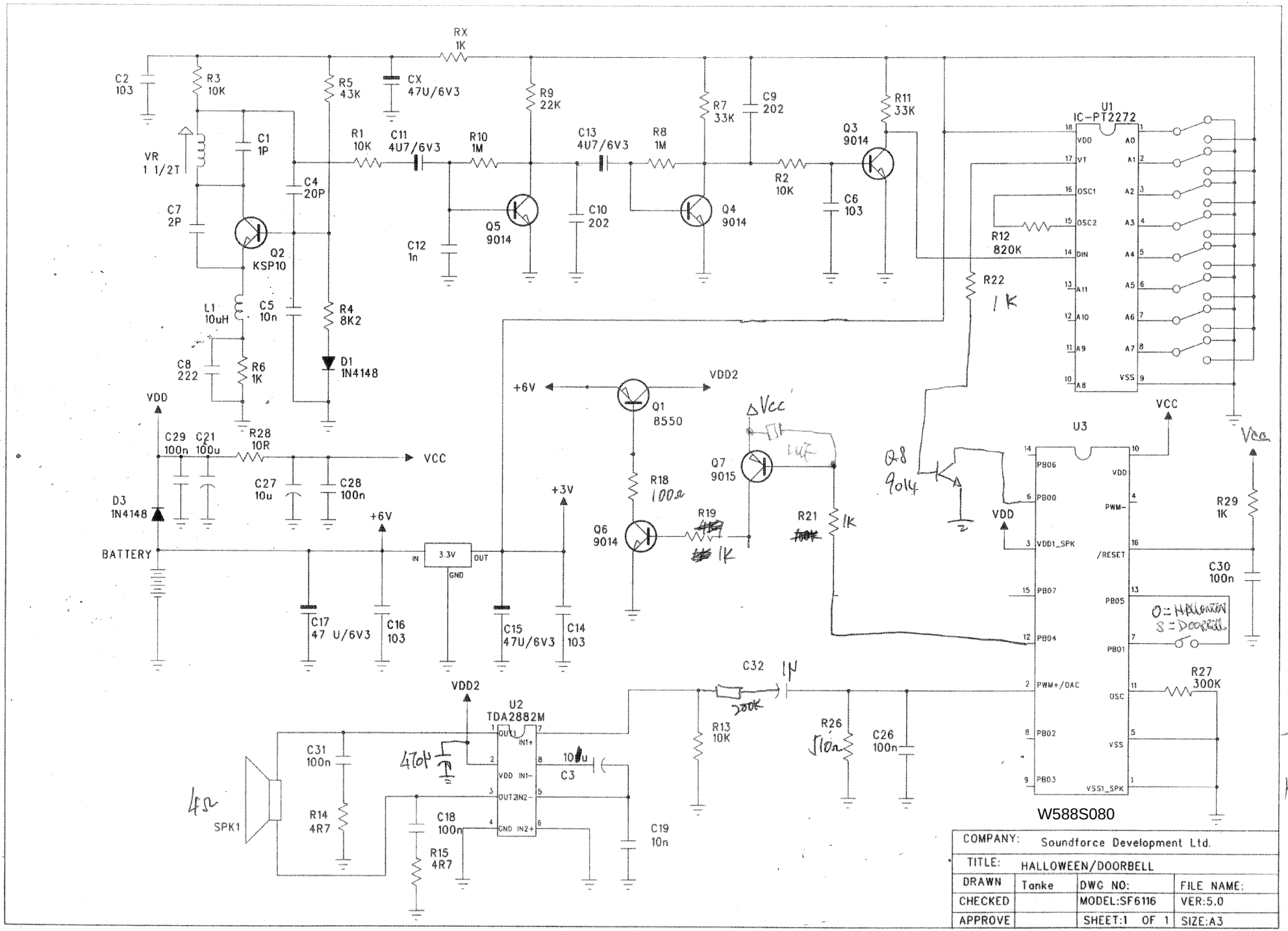

COMPANY:	Soundforce Development Ltd.		
TITLE:	HALLOWEEN/DOORBELL		
DRAWN	Tanke	DWG NO:	FILE NAME:
CHECKED		MODEL:SF6116	VER:5.0
APPROVE		SHEET:1 OF 1	SIZE:A3