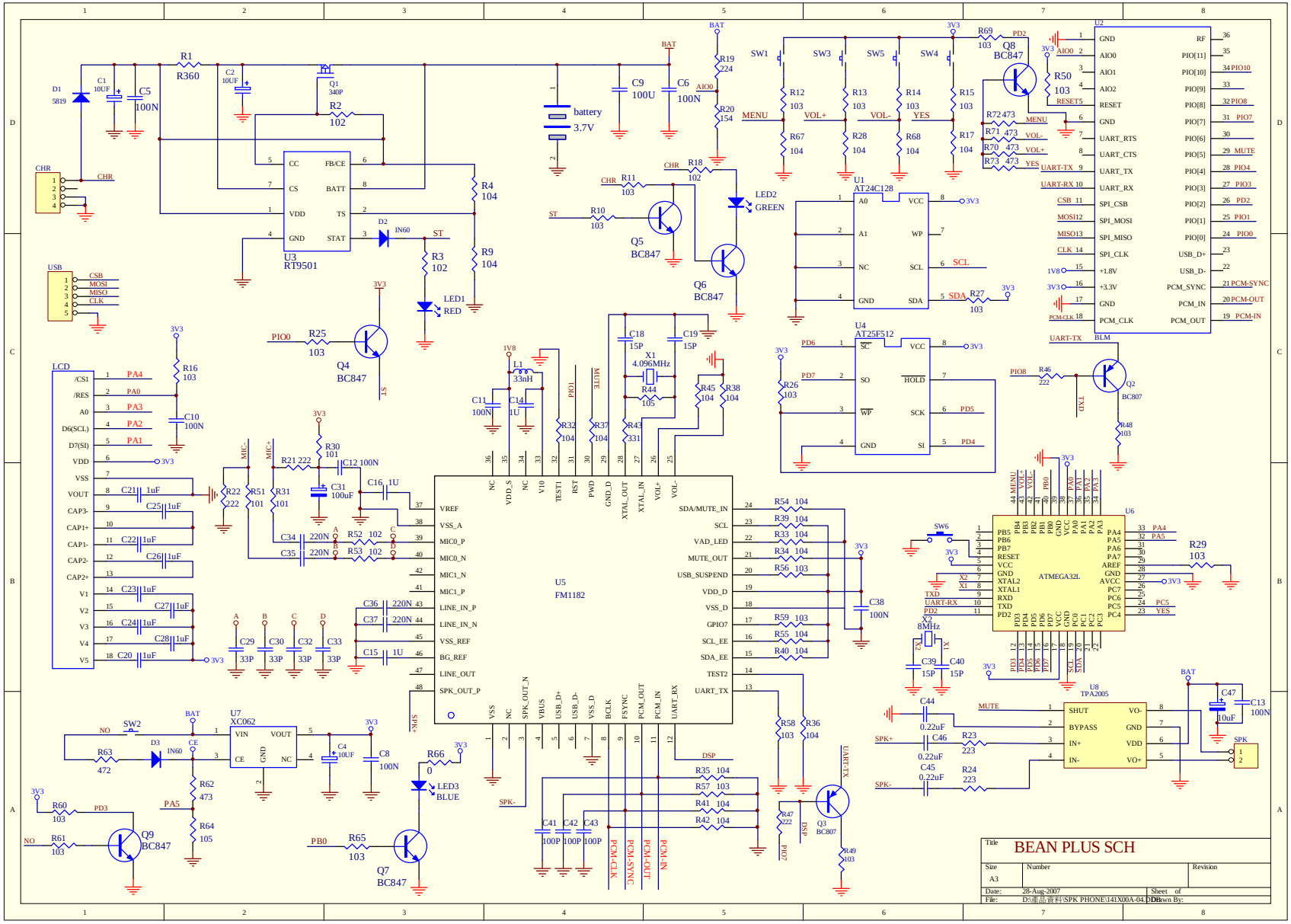
U3
RT9501
U5
FM1182
U2
BLM
U1
AT24C128
U4
AT25F512
U6
ATMEGA32L
U7
XC062
U8
TPA2005
LCD
battery
3.7V
LED1
RED
LED2
GREEN
LED3
BLUE
X1
4.096MHz
X2
8MHz
Title
BEAN PLUS SCH
Size
A3
Number
Revision
Date:
28-Aug-2007
Sheet of
File:
D:\產品資料\SPK PHONE\141X00A-04.DDB
Drawn By:

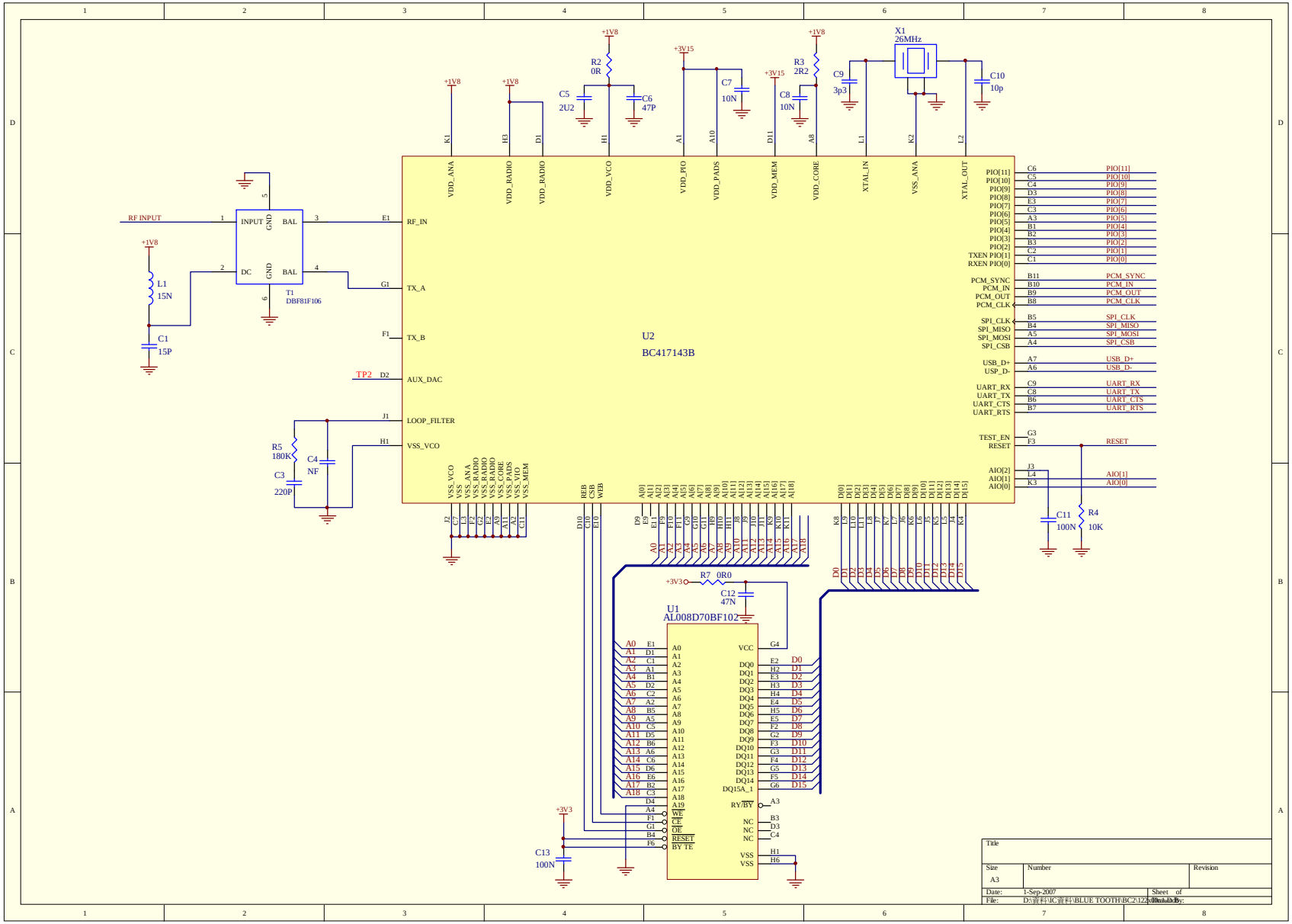

Title		
Size A3	Number	Revision
Date: 1-Sep-2007	Sheet of	
File: D:\資料\IC資料\BLUE TOOTH\BC2\123.Sch	Drawn By:	