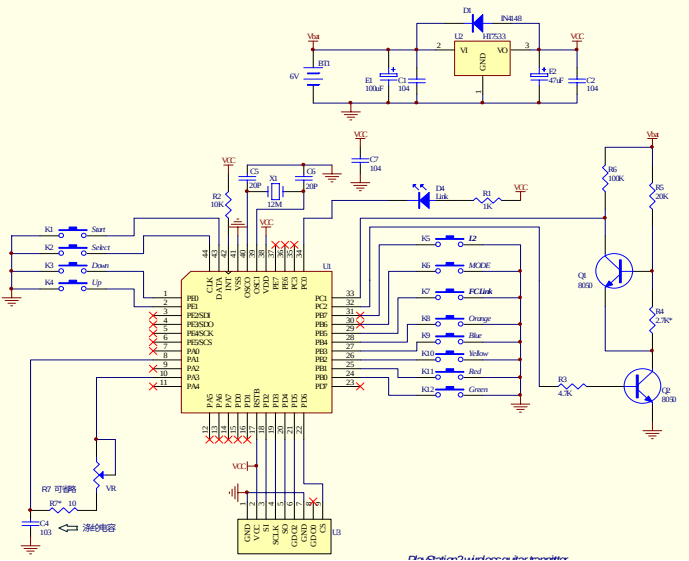
D1
IN4148
U2
HT7533
VI
VO
GND
Vbat
VCC
BT1
6V
E3
100uF
C1
104
E2
47uF
C2
104
C7
104
C5
20P
X1
12M
C6
20P
R2
10K
D4
Link
R1
1K
R6
100K
R5
20K
Q1
8050
R4
2.7K*
R3
4.7K
Q2
8050
K1 Start
K2 Select
K3 Down
K4 Up
K5 L2
K6 MODE
K7 PCLink
K8 Orange
K9 Blue
K10 Yellow
K11 Red
K12 Green
U1
CLK
DATA
VSS
OSCO
OSCI
VDD
PE0
PE1
PE2SDI
PE3SDO
PB4SCK
PE5SCS
PA0
PA1
PA2
PA3
PA4
PA5
PA6
PA7
PA8
PD0
RSTB
PD1
PD2
PD3
PD4
PD5
PD6
PC1
PC2
PE7
PB6
PB5
PB4
PB3
PB2
PB1
PB0
PE7
PC0
R7 印线路
R7* 10
VR
C4
103
浮线电容
U3
GND
VCC
TX
RX
SCLK
SIO
GDA
GND
GDO
VCC