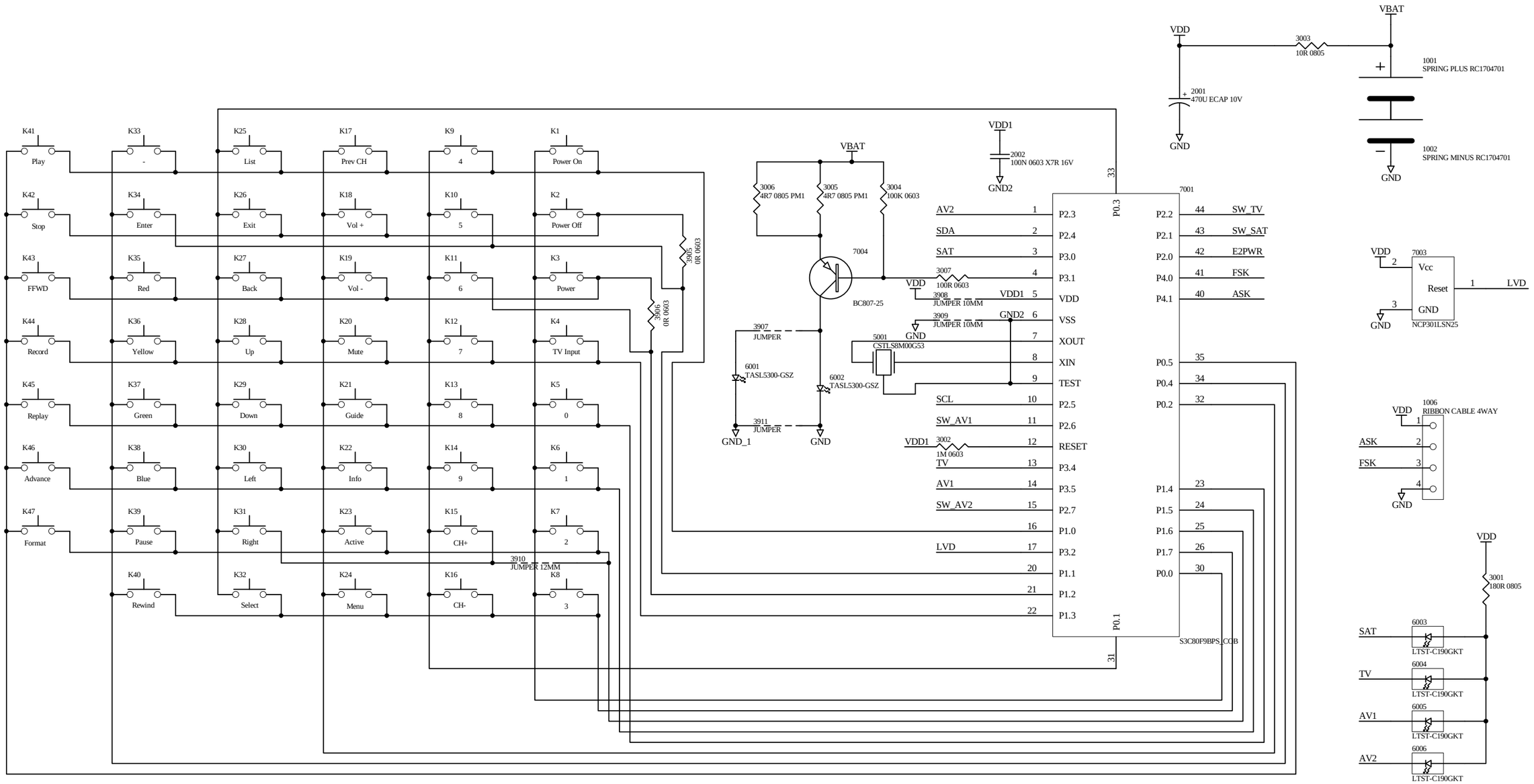

Note:

PWB used 3139 223 62731

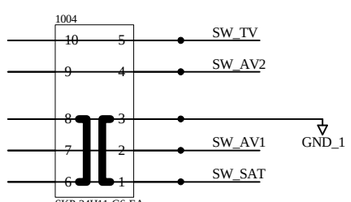

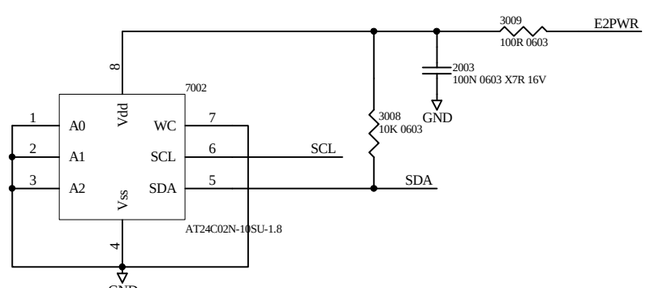

CHN			SETNAME				
CLASS_NO		PWB ASSY RC1704701/00				3139 228 6706	
	05-05-27						
NAME	Jason Loh		SUPERS	1	10	130-1	A3
	MGr	CHECK	DATE	© KONINKLIJKE PHILIPS ELECTRONICS N.V 2000			

PDF created with FinePrint pdfFactory trial version http://www.fineprint.com