22 JUL 2003

No 34325

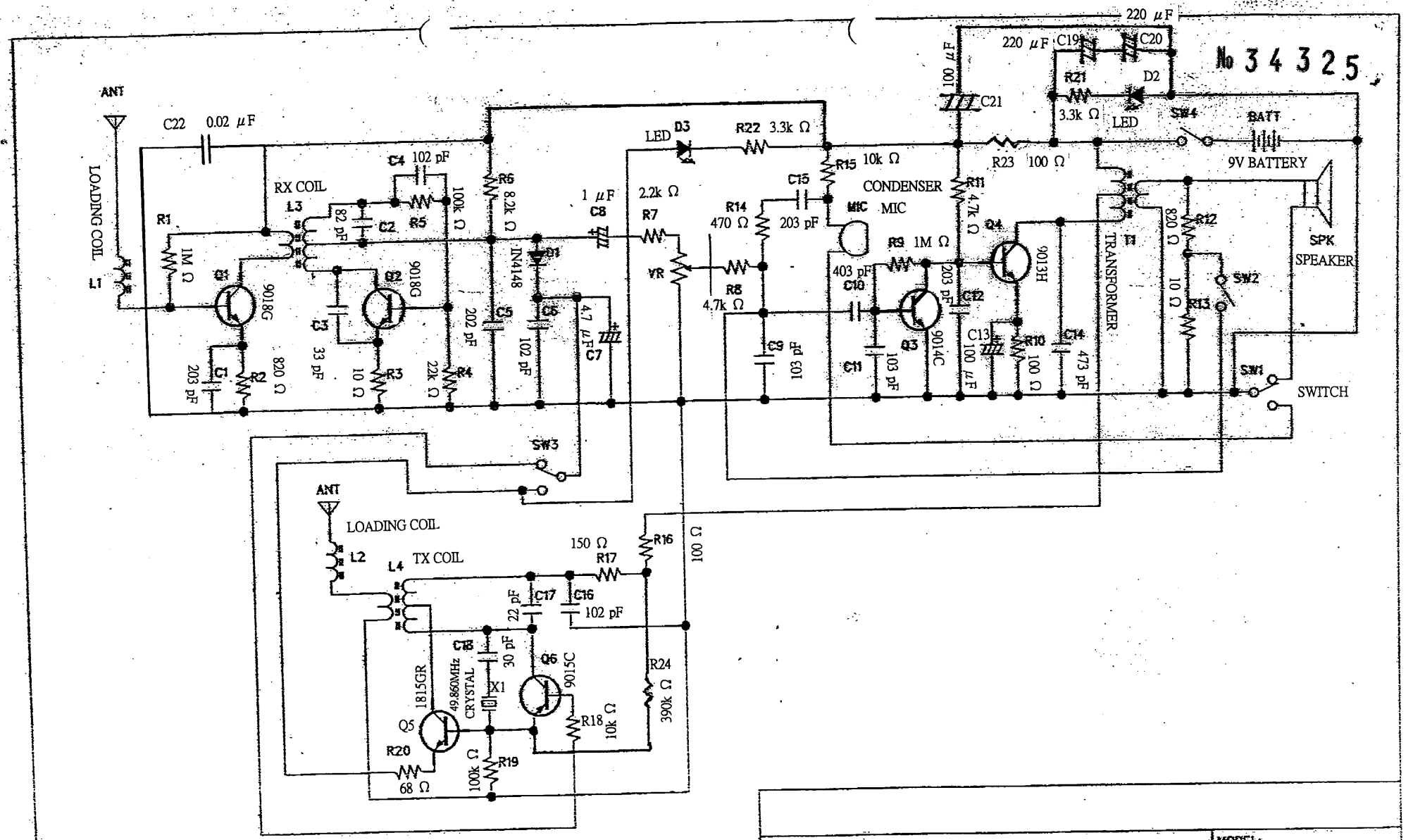

TITLE: Item 157903 Base		MODEL:
DRW./DATE:	DRAWING NO:	REMARKS:
CHK./DATE:	FILE NAME:	