APPENDIX E

: SCHEMATIC DIAGRAM

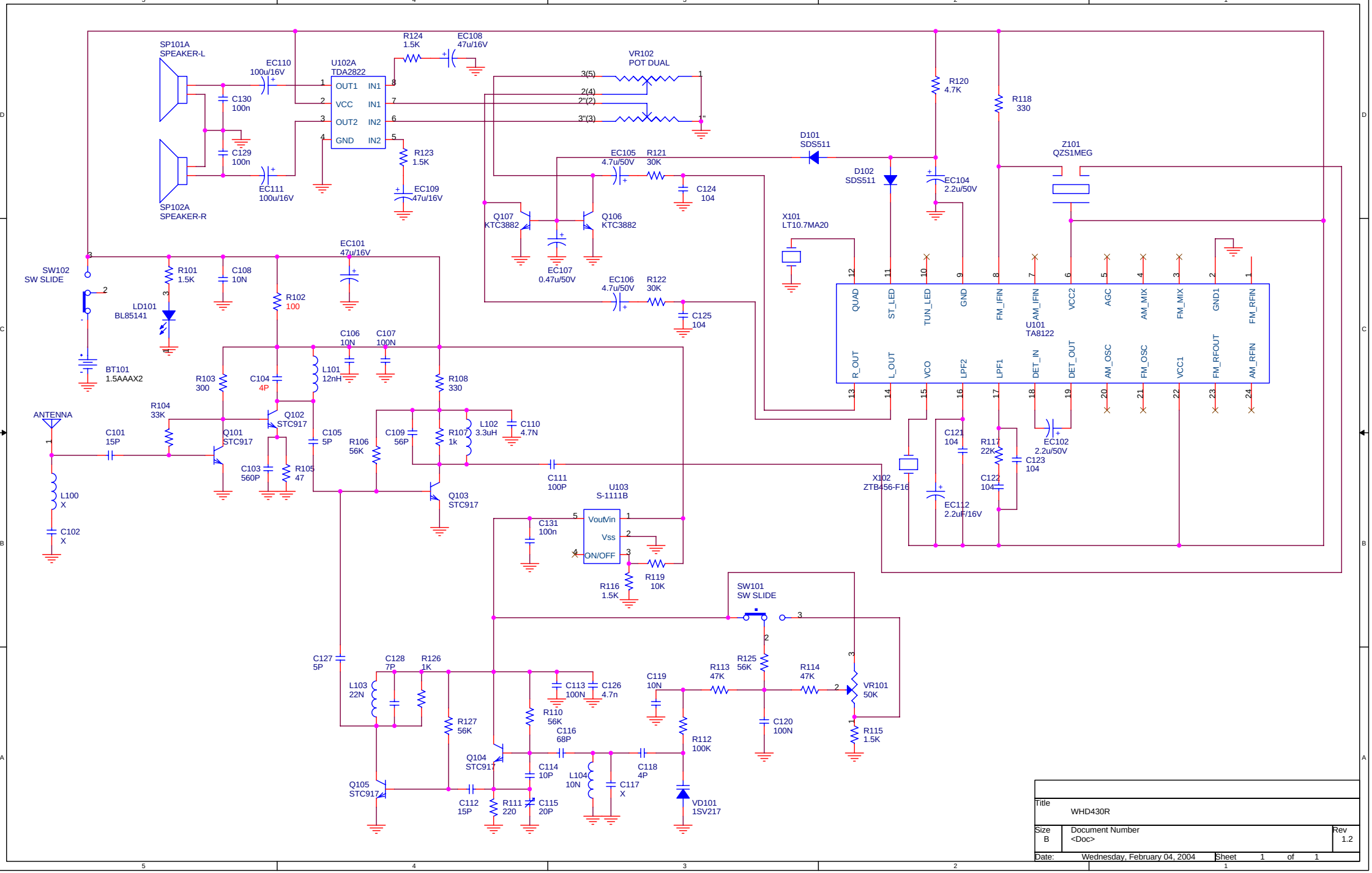

Title	WHD430R	
Size B	Document Number <Doc>	Rev 1.2
Date: Wednesday, February 04, 2004	Sheet 1 of 1	