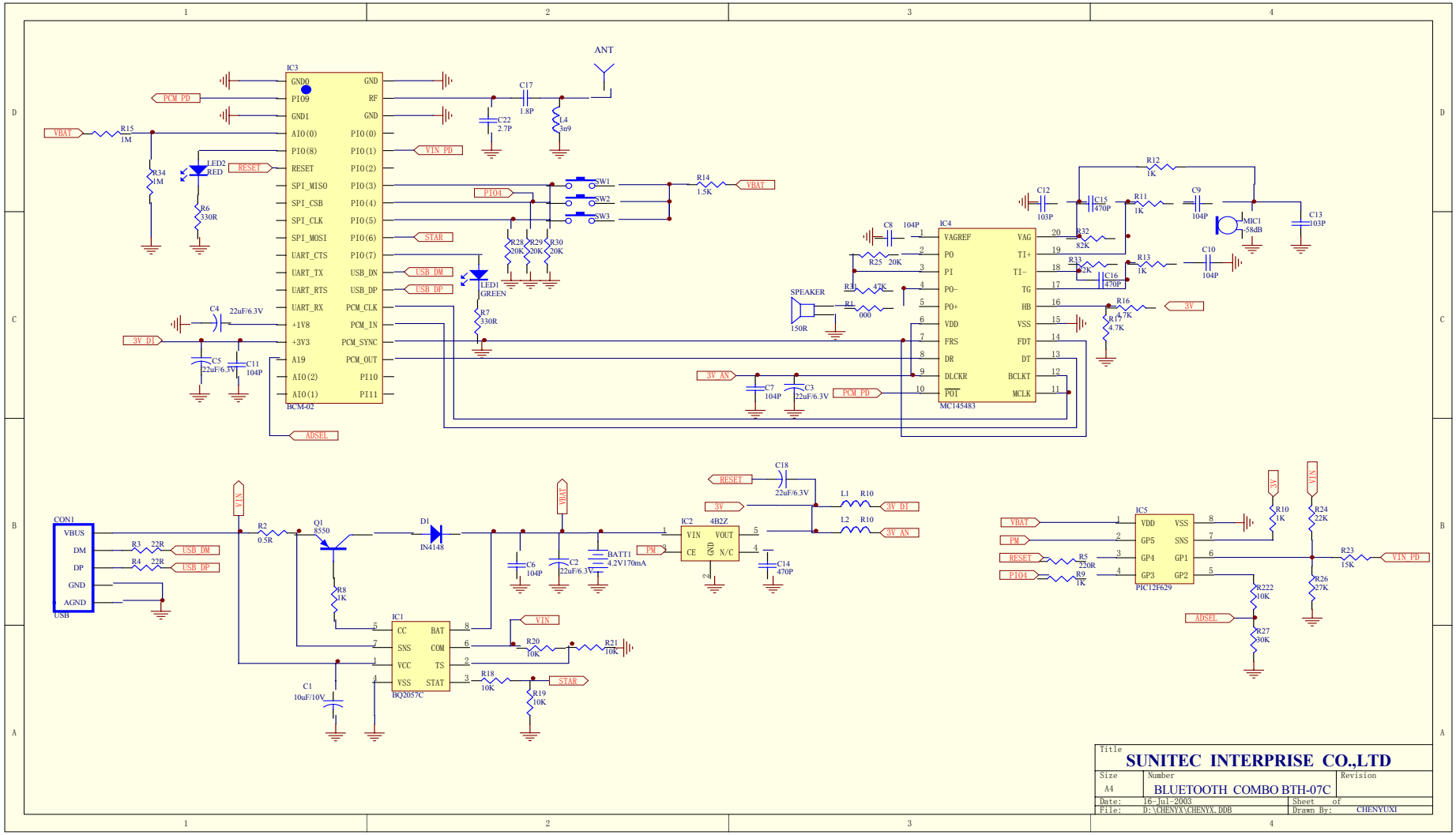
IC3
BCM-02
GND0
PIO9
GND1
AIO(0)
PIO(8)
RESET
SPI_MISO
SPI_CSB
SPI_CLK
SPI_MOSI
UART_CTS
UART_TX
UART_RTS
UART_RX
+1V8
+3V3
A19
AIO(2)
AIO(1)
GND
RF
GND
PIO(0)
PIO(1)
PIO(2)
PIO(3)
PIO(4)
PIO(5)
PIO(6)
PIO(7)
USB_DN
USB_DP
PCM_CLK
PCM_IN
PCM_SYNC
PCM_OUT
PIO10
PIO11
ANT
PCM_PD
VBAT
VIN_PD
RESET
PIO4
STAR
USB_DM
USB_DP
3V_DI
ADSEL
SW1
SW2
SW3
LED1 GREEN
LED2 RED
SPEAKER
MIC1 58dB
IC4
MC145483
VAGREF
PO
PI
PO-
PO+
VDD
FRS
DR
DLCKR
POI
VAG
TI+
TI-
TG
HB
VSS
FDT
DT
BCLKT
MCLK
3V_AN
3V
CON1
VBUS
DM
DP
GND
AGND
USB
VIN
IC1
BQ2057C
CC
SNS
VCC
VSS
BAT
COM
TS
STAT
Q1 8550
D1 IN4148
BATT1 4.2V170mA
IC2 4B2Z
VIN
VOUT
CE
N/C
GND
PM
IC5
PIC12F629
VDD
GP5
GP4
GP3
VSS
SNS
GP1
GP2
Title
SUNITEC INTERPRISE CO.,LTD
Size
A4
Number
BLUETOOTH COMBO BTH-07C
Revision
Date: 16-Jul-2003
File: D:\CHENYX\CHENYX.DDB
Sheet of
Drawn By: CHENYUXI