APPENDIX D

: BLOCK DIAGRAM
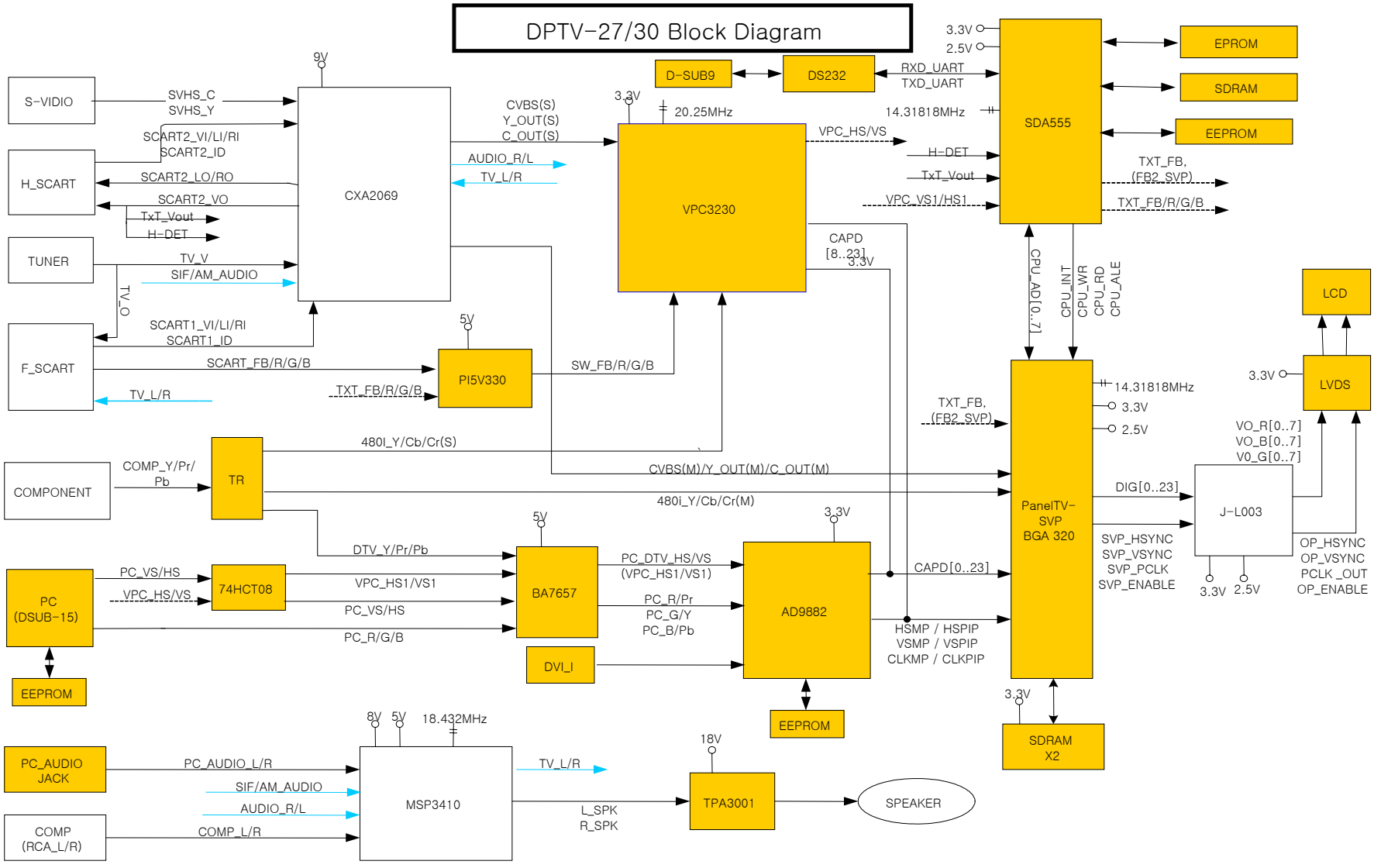
DPTV-27/30 Block Diagram