APPENDIX D

: BLOCK DIAGRAM
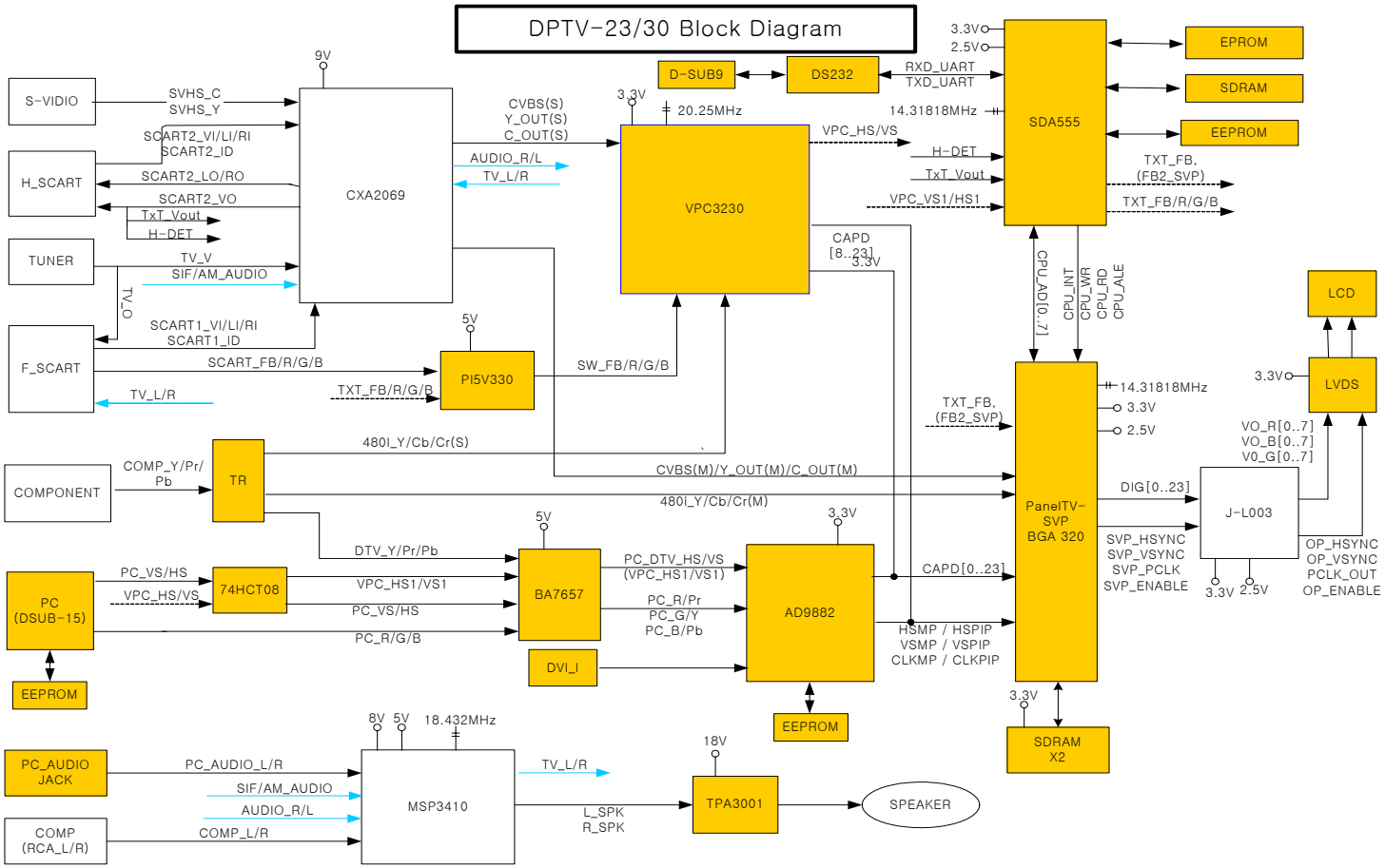
DPTV-23/30 Block Diagram