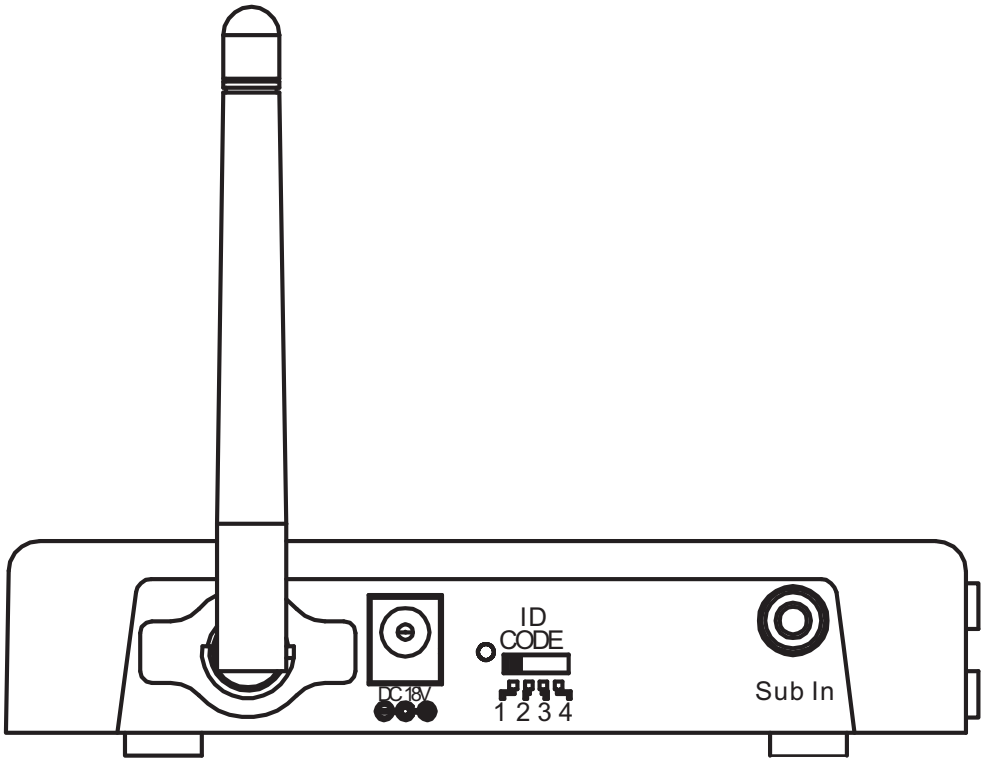
ID
CODE
1 2 3 4
DC 18V
Sub In

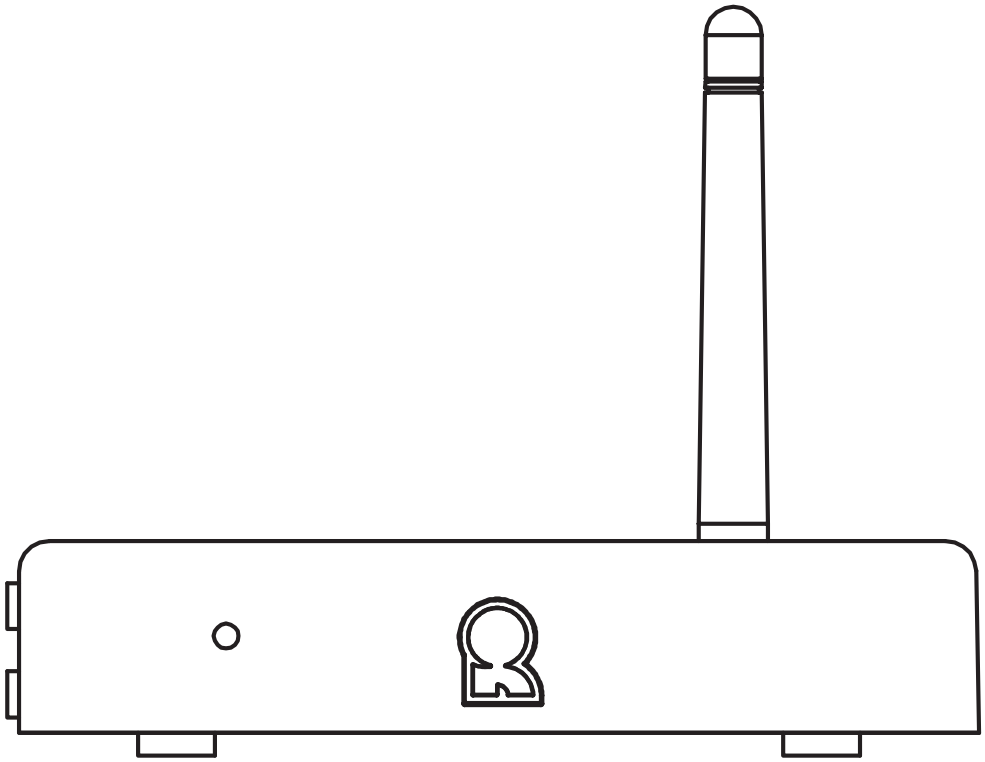

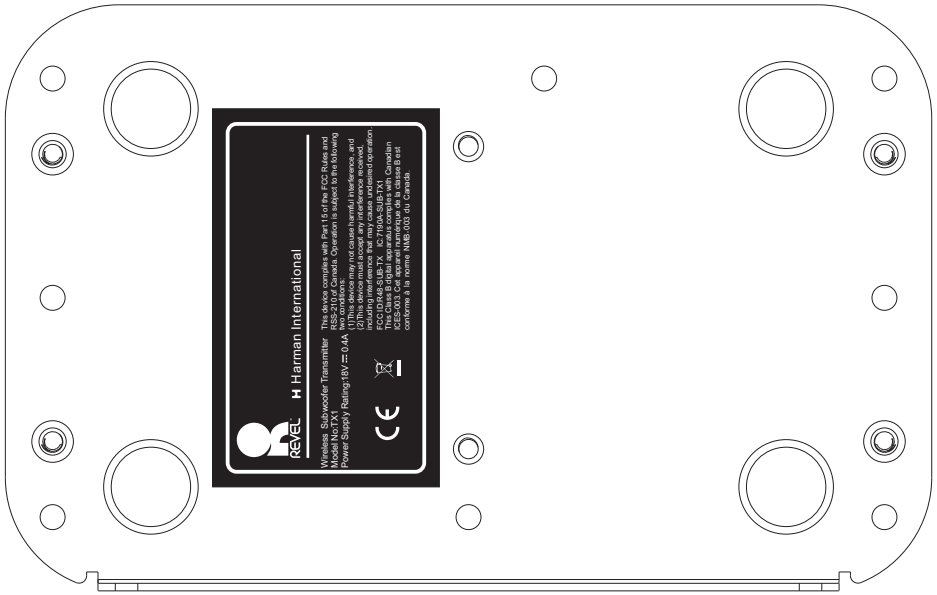
REVEL
Harman International
Wireless Subwoofer Transmitter
Model No:TX1
Power Supply Rating:18V ⎓ 0.4A
This device complies with Part 15 of the FCC Rules and RSS-210 of Canada. Operation is subject to the following two conditions:
(1)This device may not cause harmful interference, and
(2)This device must accept any interference received, including interference that may cause undesired operation.
FCC ID:R48-SUB-TX IC:7190A-SUB-TX1
This Class B digital apparatus complies with Canadian ICES-003. Cet appareil numérique de la classe B est conforme à la norme NMB-003 du Canada.

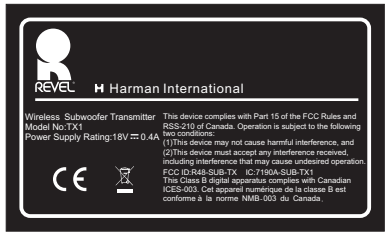
REVEL
Harman International
Wireless Subwoofer Transmitter
Model No:TX1
Power Supply Rating:18V ⎓ 0.4A
This device complies with Part 15 of the FCC Rules and RSS-210 of Canada. Operation is subject to the following two conditions:
(1)This device may not cause harmful interference, and
(2)This device must accept any interference received, including interference that may cause undesired operation.
FCC ID:R48-SUB-TX IC:7190A-SUB-TX1
This Class B digital apparatus complies with Canadian ICES-003. Cet appareil numérique de la classe B est conforme à la norme NMB-003 du Canada.