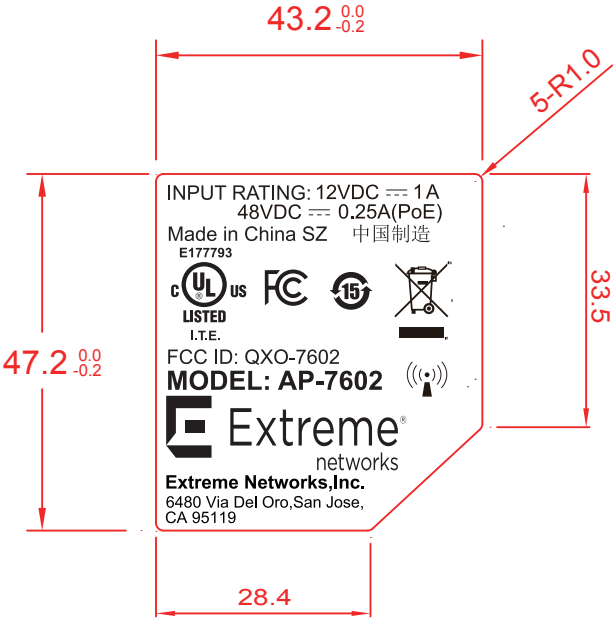
43.2 0.0 -0.2
5-R1.0
INPUT RATING: 12VDC ⎓ 1A
48VDC ⎓ 0.25A(PoE)
Made in China SZ 中国制造
E177793
C UL US
LISTED
I.T.E.
FCC ID: QXO-7602
MODEL: AP-7602
Extreme networks
Extreme Networks,Inc.
6480 Via Del Oro,San Jose,
CA 95119
47.2 0.0 -0.2
33.5
28.4