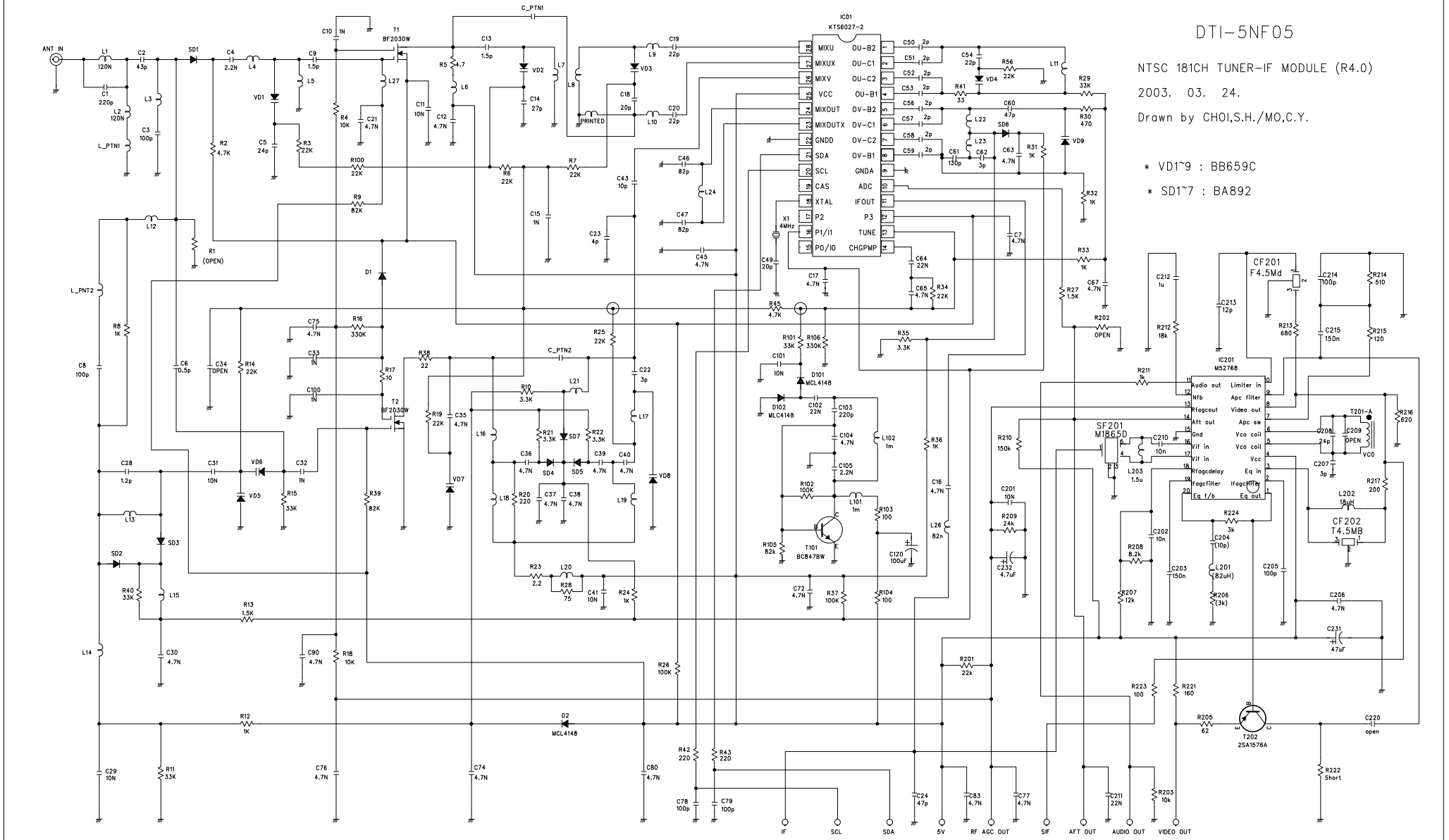
DTI-5NF05
NTSC 181CH TUNER-IF MODULE (R4.0)
2003. 03. 24.
Drawn by CHOI,S.H./MO,C.Y.
* VD1~9 : BB659C
* SD1~7 : BA892
IC01
KTS6027-2
MIXU
MIXUX
MIXV
VCC
MIXOUT
MIXOUTX
GNDD
SDA
SCL
CAS
XTAL
P2
P1/I1
P0/I0
OU-B2
OU-C1
OU-C2
OU-B1
OV-B2
OV-C1
OV-C2
OV-B1
GNDA
ADC
IFOUT
P3
TUNE
CHGPMP
IC201
M5276B
Audio out
Nfb
Rfagcout
Aft out
Gnd
Vif in
Vif in
Rfagcdelay
Ifagcfilter
Eq f/b
Limiter in
Apc filter
Video out
Apc sw
Vco coil
Vco coil
Vcc
Eq in
Ifagcfilter
Eq out
SF201
M1865D
CF201
F4.5Md
CF202
T4.5MB
T101
BC847BW
T202
2SA1576A
ANT IN
IF
SCL
SDA
5V
RF AGC OUT
SIF
AFT OUT
AUDIO OUT
VIDEO OUT