PART MUST BE FREE OF ALL SCRATCHES AND BURRS. UNLESS OTHERWISE SPECIFIED, REMOVE SHARP EDGES BETWEEN 0.1 AND 0.3x45° OR EQUAL RAD. THIS PART SHOULD BE PACKED SO AS TO AVOID DAMAGE DURING TRANSPORT.

THIS PUBLICATION CONTAINS PROPRIETATY INFORMATION OF ELMO-TECH LTD. IT IS SUPPLIED TO THOSE CONCERNED WITH OPERATION AND MAINTENANCE OF THE EQUIPMENT COVERED THEREIN, AND MAY NOT BE DISCLOSED TO OTHERS WITHOUT THE EXPRESS WRITTEN PERMISSION OF ELMO-TECH LTD.

REV	DESCRIPTION	E.C.O.	DATE	DRAWN	CHECKED
A00	RELEASE	000677	19/10/09	M.G.	Y.G.

RoHS

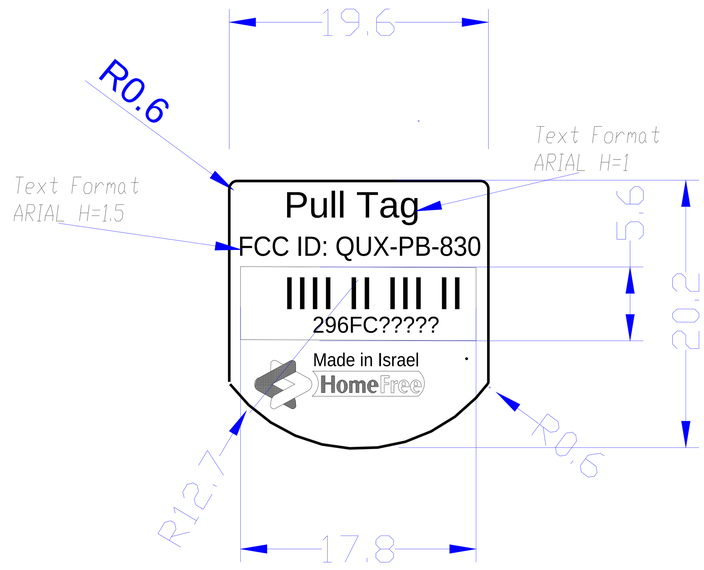

SCALE 1:1

SCALE 2:1

NOTES

1. BACKGROUND COLOR : SILVER.
2. PRINTING COLOR FOR TEXT, BARCODE, LOGO: BLACK .
3. MATERIAL DESCRIPTION:
   3.1 FACEFILM: premium quality, 50 micron cast vinyl film.
   3.2 ADHESIVE: permanent adhesive, acrylic based.
   3.3 BACKING PAPER: one side coated white kraft paper, 140 g/m.
   3.4 PLASTIC FOIL WILL BE LAMINATED OVER FACEFILM.
4. THE VALUE OF S/N WILL BE MENTIONED ON PURCHASE ORDER.
   4.1 THE BARCODE HEIGHT = 3.25mm
   4.2 THE S/N TEXT HEIGHT = 1.5mm
5. THE LABEL WILL BE GLUED ON THE DEPRESSION ON THE BUTTOM OF THE PLASTIC PRODUCT.
6. HomeFree's LOGO WILL BE SUPPLIED BY ELMOTECH.
7. PACKAGE: THE LABEL WILL BE SUPPLIED ON ROLLS.

UNLESS OTHERWISE SPECIFIED :
ALL DIMENSIONS ARE IN mm.

TOLERANCES:

LINEAR	± 0.2
ANGLES	± 0° 30'
HOLES	+ 0.1
BETWEEN HOLES CENTERS	± 0.1

ROUGHNESS:

FILE: A2
SCALE: 1:1

TITLE:
LABEL
FCC- Home Free
PB-830-Pull Tag

CAT. No.: 42110023
PROJECT: PB-830
NEXT ASSY: -

HomeFree
2 Habarzel St.
Tel-Aviv 69710
Tel.: 972-3-6478871
Fax.: 972-3-6478872

	NAME	SIGN	DATE
DRAW	M.G.	M.G.	19/10/09
DES	M.G.	M.G.	19/10/09
CHK	Y.G	Y.G	19/10/09
APPR	Y.G.	Y.G.	19/10/09

SHEET 1 OF 1

DWG NO. 42110023 REV.A00

A4