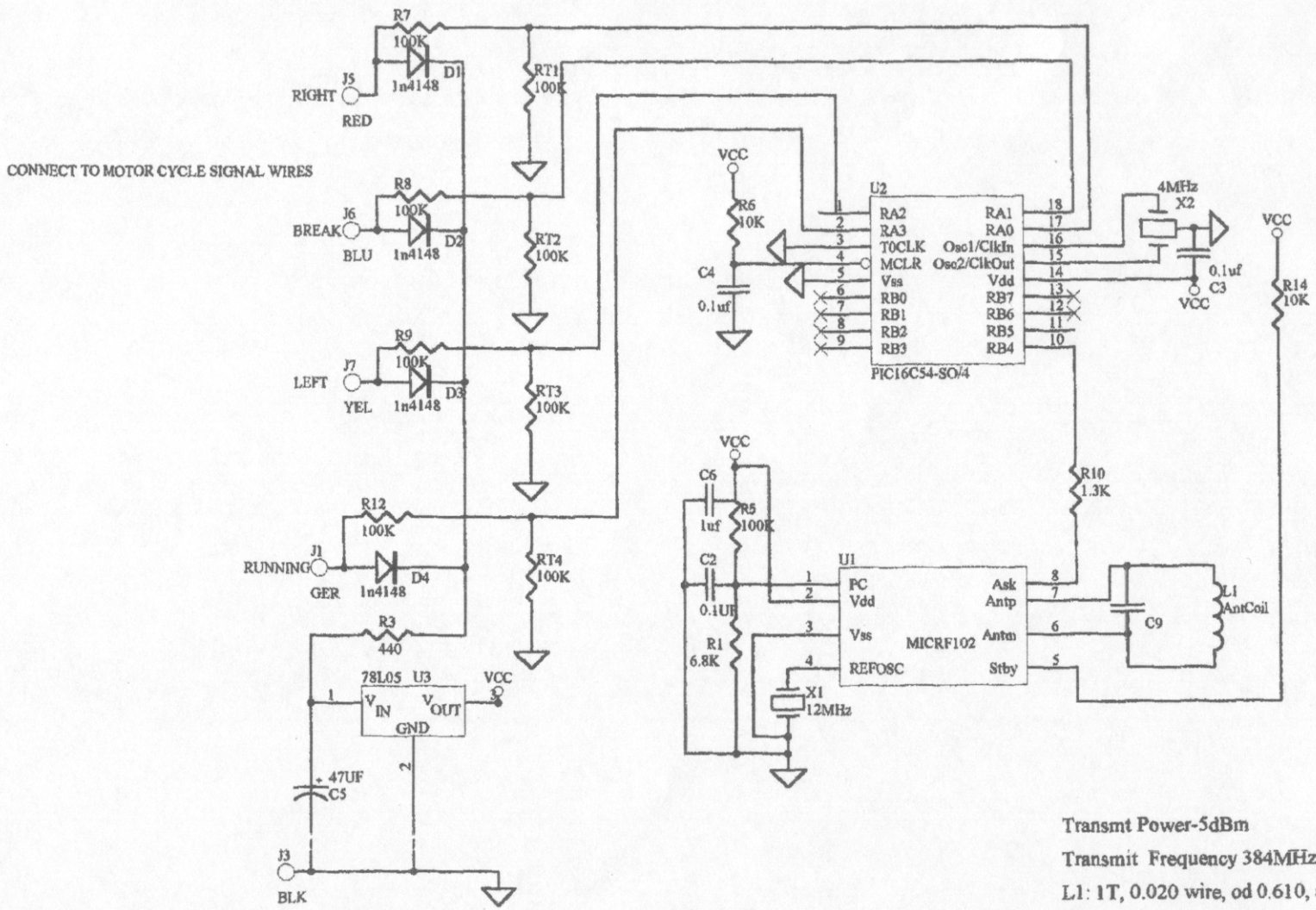

Transmt Power-5dBm

Transmit Frequency 384MHz

L1: 1T, 0.020 wire, od 0.610, air core

Title	BIKE TRANSMITTER	
Size A	Number	Revision
Date: 3-Dec-2002	Sheet of	
File: D:\Marcus\DOCS\wwm2\EENDBIK\EENDBIK.DB	Drawn By: MARCUS ESCOBOSA	