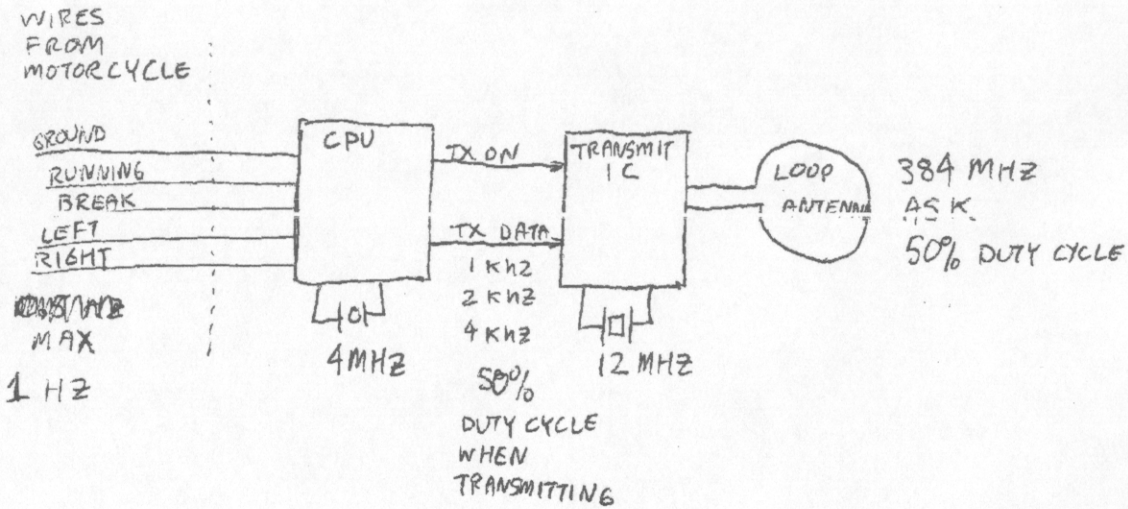

BLOCK DIAGRAM

MARBROOK TRANSMITTER