REVISIONS				
ZONE	REV	DESCRIPTION	DATE	APPROVED
	A	New version release	2023.11.22	

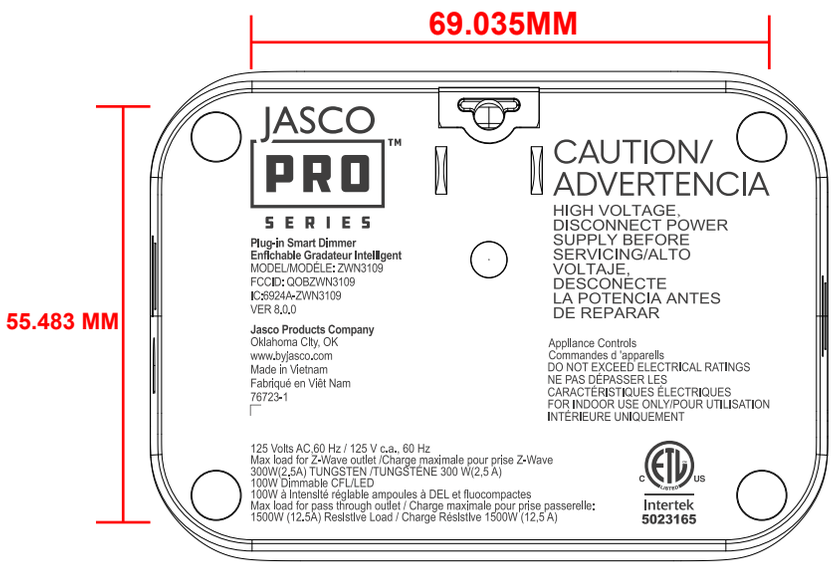

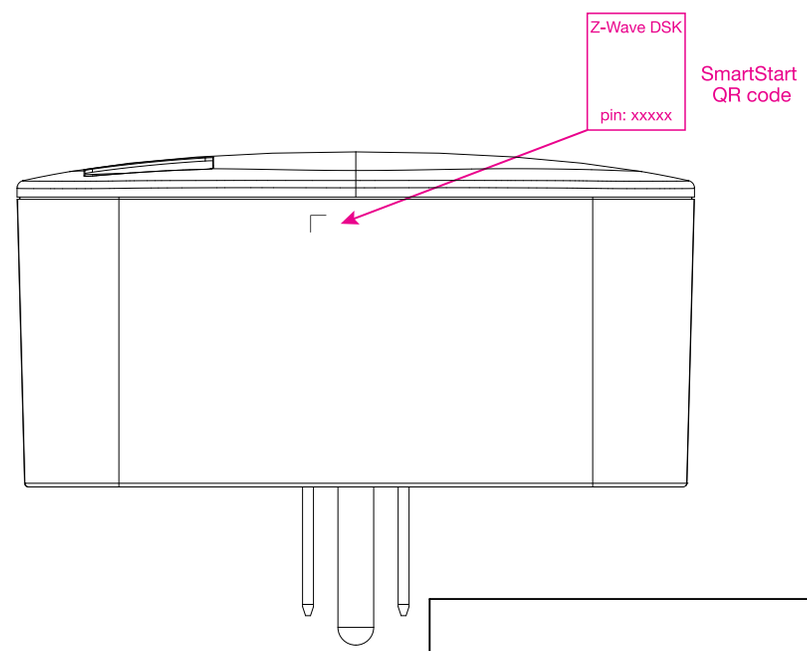

NOAH

TOLERANCE UNLESS ESPECIALLY EXPLAIN X. ‘0.2 X.XX ‘0.05 X.X ‘0.1 aX~ ‘0.5~			MODEL NO:	ZWN3109		PART NAME:			
DRAW.BY:	曾清华	MAT'L:				P/N NO.			
CHECKED.BY:		COLOR:				FINISH:	镭雕		
REVIEWED BY:		SCALE:	N/A	QTY:	1	TOOL NO:			
APPROVED BY:		SIZE:	A4	UNIT:	MM	SHEET:	1OF1	REV:	A