File Name: 58436 Enclosure v1
Production: Mike M
Date: 07/08/21
PM: Matt Henson

NEW ART

LASER ETCH

PRODUCT MARKINGS:
Enclosure & Yoke

H- 105.008 mm
W-60.007 mm
D- 45.191 mm

JASCO®
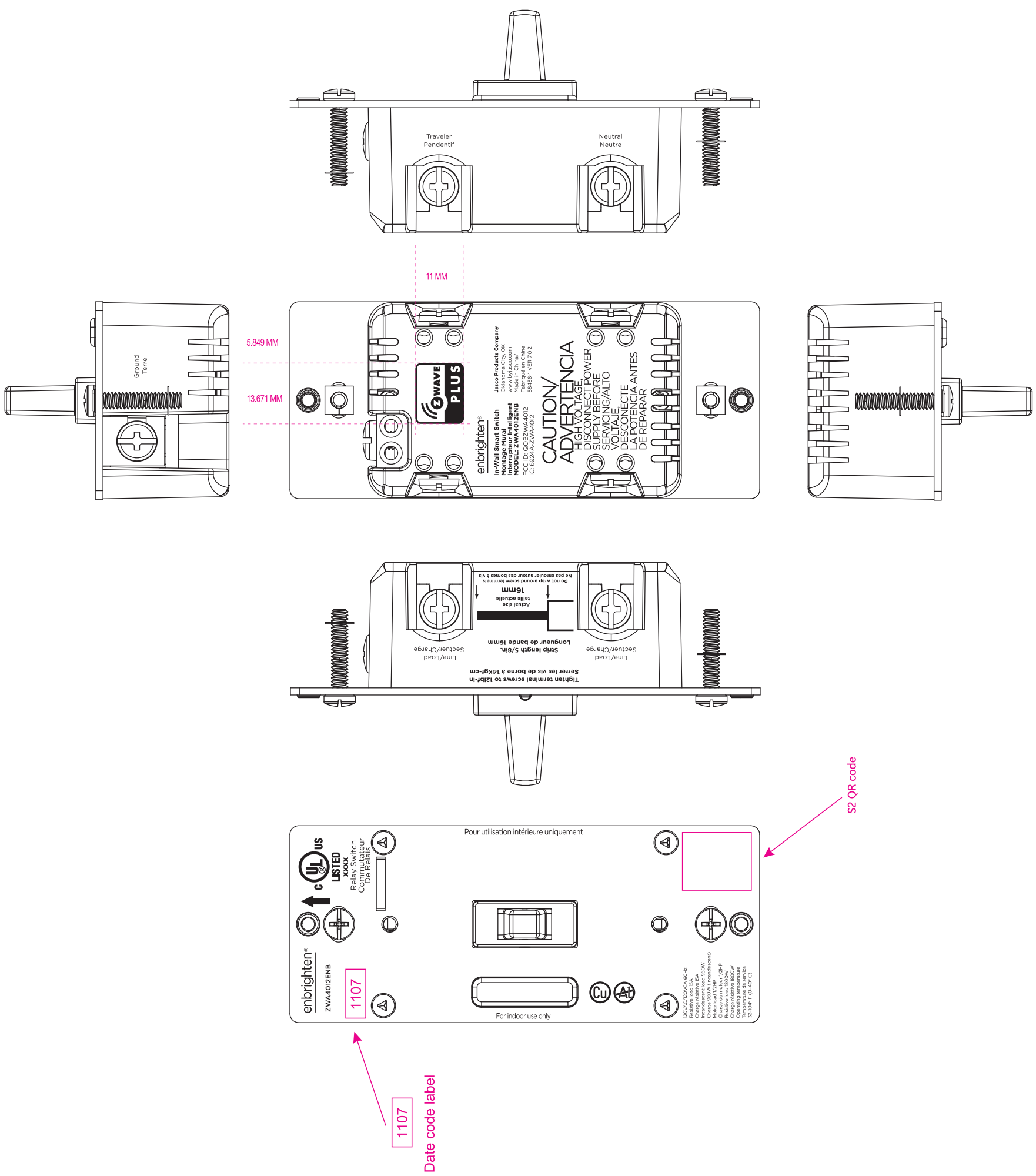
COMMENTS: Laser etch specifications for:
Z-Wave product
Model no: ZWA4012ENB / 58436