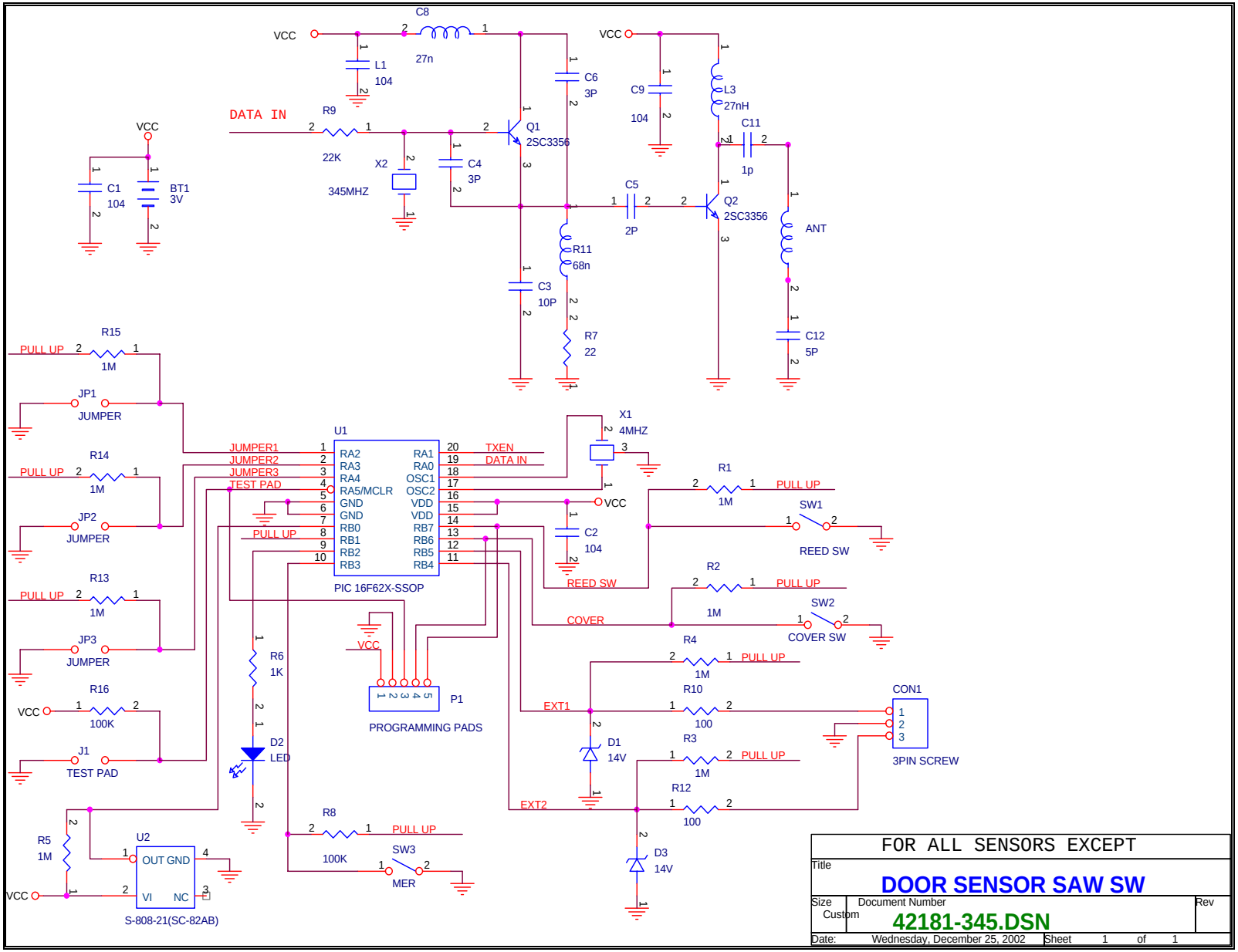
VCC
C8
27n
L1
104
DATA IN
R9
22K
X2
345MHZ
C4
3P
Q1
2SC3356
C6
3P
C9
104
L3
27nH
C11
1p
C5
2P
Q2
2SC3356
ANT
C1
104
BT1
3V
R11
68n
C3
10P
R7
22
C12
5P
R15
PULL UP
1M
JP1
JUMPER
R14
JP2
R13
JP3
R16
100K
J1
TEST PAD
U1
JUMPER1
JUMPER2
JUMPER3
TEST PAD
RA2
RA3
RA4
RA5/MCLR
GND
GND
RB0
RB1
RB2
RB3
RA1
RA0
OSC1
OSC2
VDD
VDD
RB7
RB6
RB5
RB4
TXEN
DATA IN
PIC 16F62X-SSOP
X1
4MHZ
C2
104
R1
SW1
REED SW
R2
SW2
COVER SW
COVER
R4
R10
100
EXT1
D1
14V
R3
R12
100
EXT2
D3
14V
CON1
3PIN SCREW
R6
1K
D2
LED
P1
PROGRAMMING PADS
R8
100K
SW3
MER
R5
1M
U2
OUT GND
VI
NC
S-808-21(SC-82AB)
FOR ALL SENSORS EXCEPT
Title
DOOR SENSOR SAW SW
Size
Custom
Document Number
42181-345.DSN
Rev
Date:
Wednesday, December 25, 2002
Sheet 1 of 1