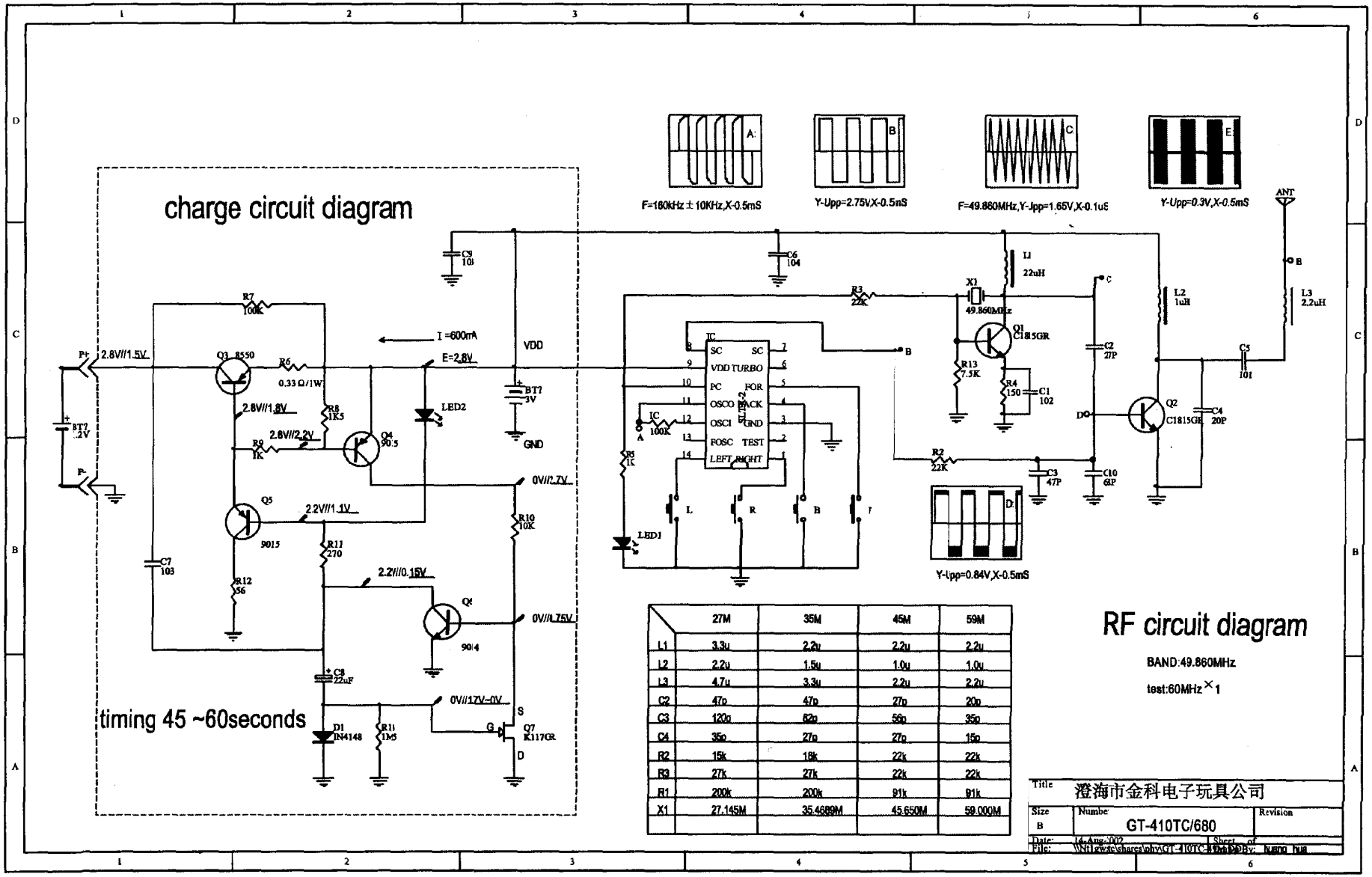

	27M	35M	45M	59M
L1	3.3u	2.2u	2.2u	2.2u
L2	2.2u	1.5u	1.0u	1.0u
L3	4.7u	3.3u	2.2u	2.2u
C2	47p	47p	27p	20p
C3	120p	82p	56p	35p
C4	35p	27p	27p	15p
R2	15k	18k	22k	22k
R3	27k	27k	22k	22k
R1	200k	200k	91k	91k
X1	27.145M	35.4689M	45.650M	59.000M