REV. NO.	DESCRIPTION	EFFECTIVE DATE
00	NEW RELEASE	JUL-18-02

To: Terry Chan.
Fm: Richfield / Rita.
12/8/2002

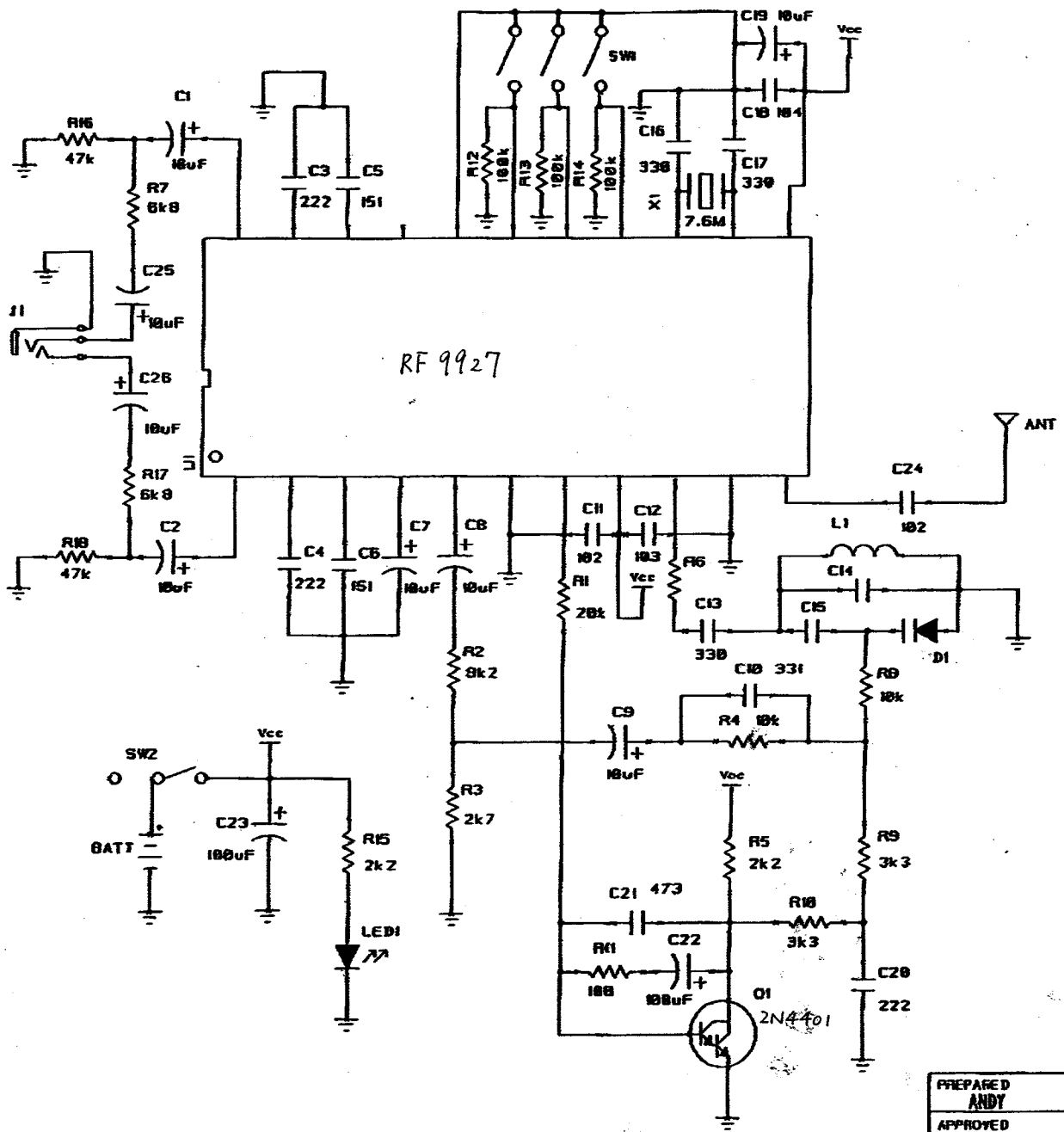

RICHFIELD ELECTRONICS			
TITLE FM TRANSMITTER			
PREPARED ANDY	DATE JUL-18-02	DWG. NO. AT2001-01	
APPROVED JACKY	DATE JUL-18-02	SCALE ---	SHEET 1 OF 1