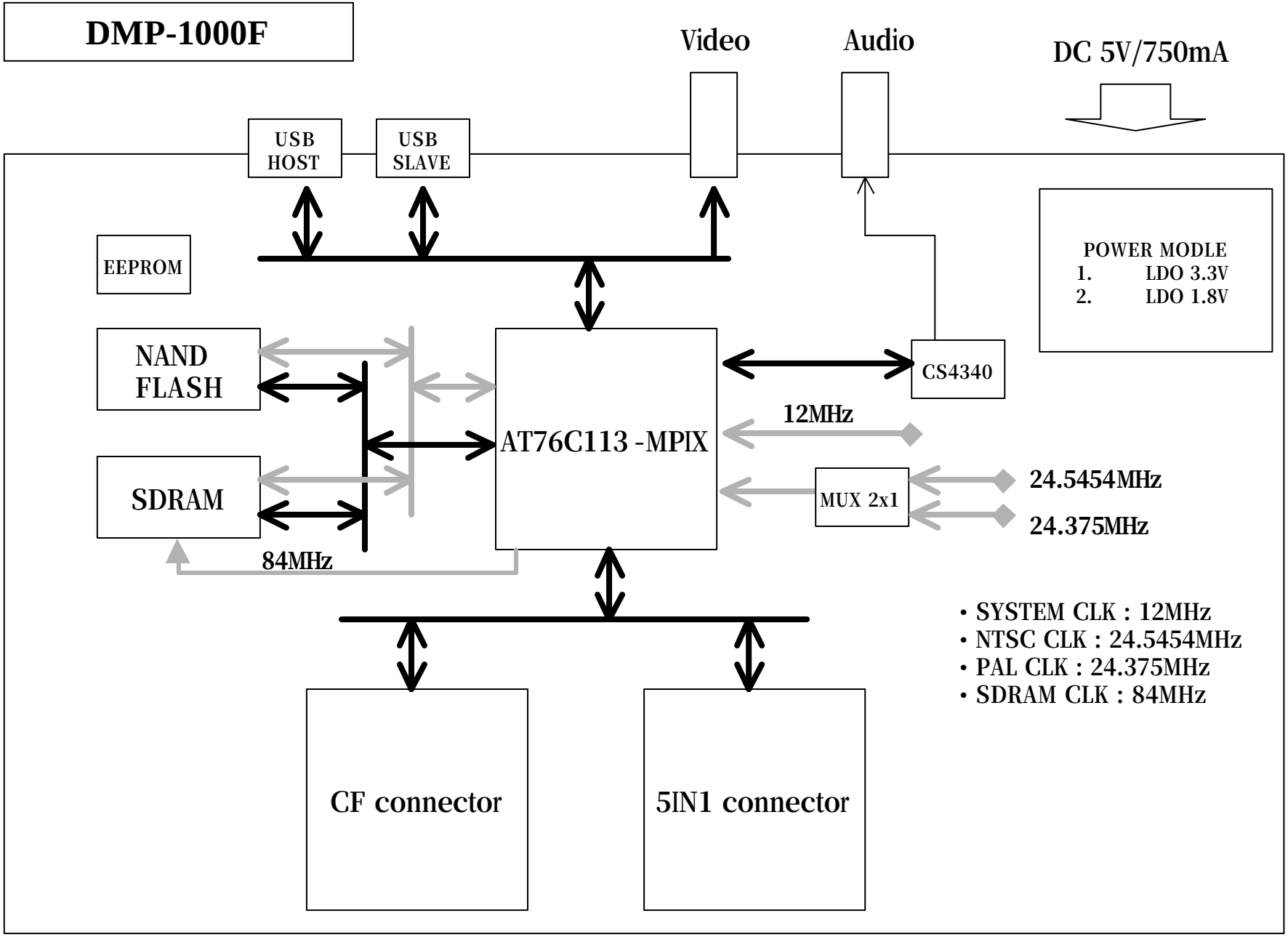
DMP-1000F
Video
Audio
DC 5V/750mA
USB HOST
USB SLAVE
EEPROM
POWER MODLE
1. LDO 3.3V
2. LDO 1.8V
NAND FLASH
AT76C113 -MPIX
CS4340
12MHz
SDRAM
MUX 2x1
24.5454MHz
24.375MHz
84MHz
• SYSTEM CLK : 12MHz
• NTSC CLK : 24.5454MHz
• PAL CLK : 24.375MHz
• SDRAM CLK : 84MHz
CF connector
5IN1 connector