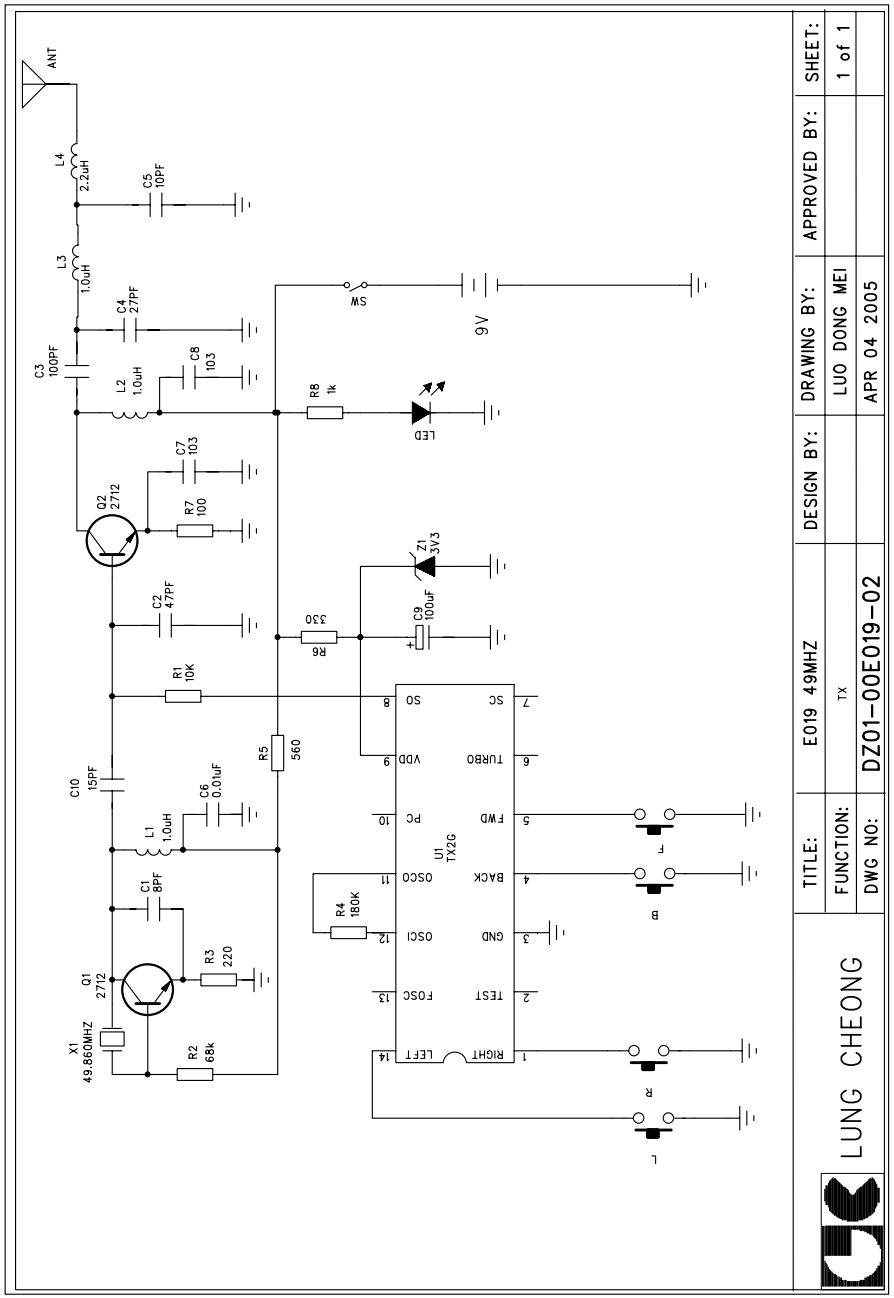
ANT
L4 2.2uH
C5 10PF
L3 1.0uH
C4 27PF
C3 100PF
L2 1.0uH
C8 103
SW
9V
R8 1k
LED
C7 103
Q2 2712
R7 100
Z1 3V3
C2 47PF
R6 330
C9 100uF
R1 10K
R5 560
C10 15PF
C6 0.01uF
L1 1.0uH
C1 8PF
R4 180K
Q1 2712
R3 220
X1 49.860MHZ
R2 68k
U1 TX2G
SO
VDD
PC
OSCO
OSCI
FOSC
LEFT
SC
TURBO
FWD
BACK
GND
TEST
RIGHT
F
B
R
L
TITLE: E019 49MHZ
FUNCTION: TX
DWG NO: DZ01-00E019-02
DESIGN BY:
DRAWING BY: LUO DONG MEI
APR 04 2005
APPROVED BY:
SHEET: 1 of 1
LUNG CHEONG