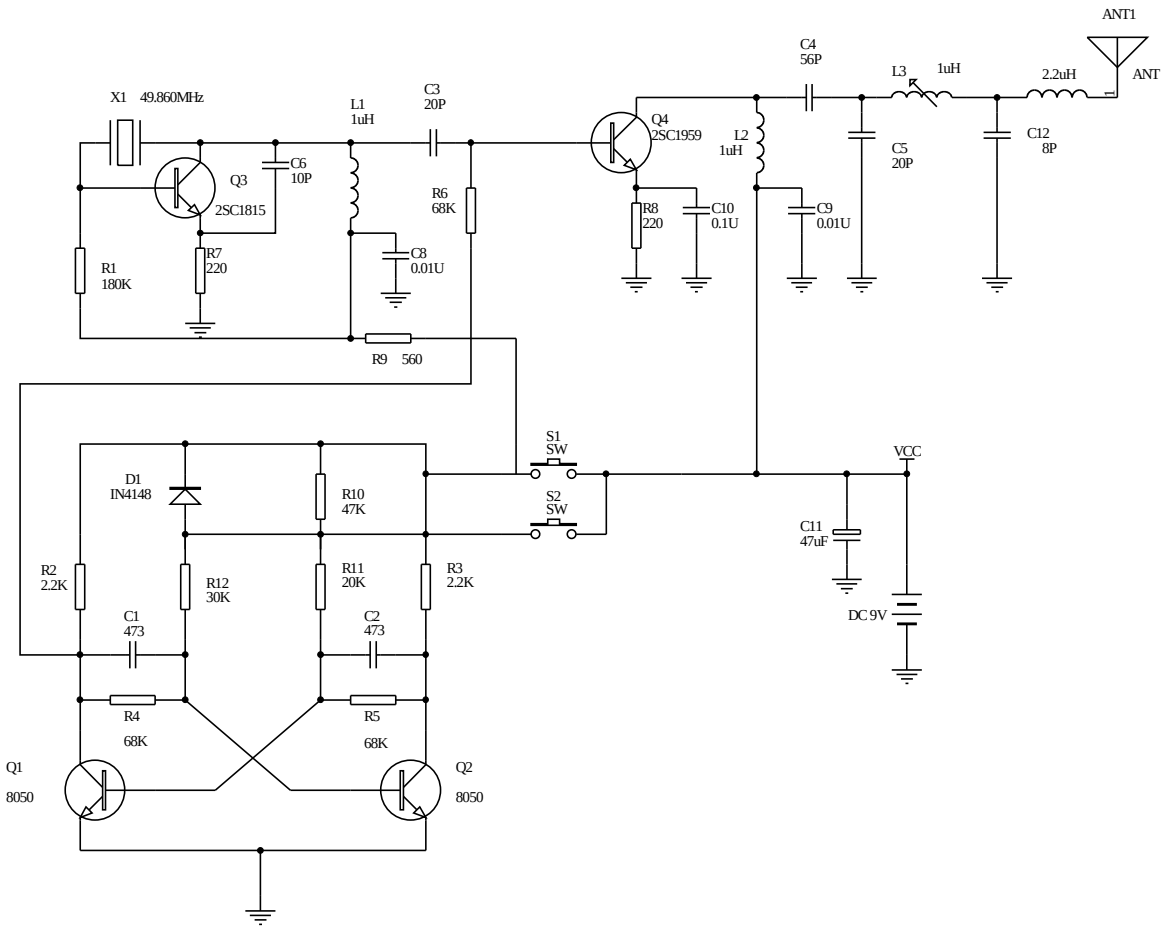

LUNG CHEONG	TITLE	SOFT RC CAR	DESIGN	DRAWING	APPROVED	SHEET
	FUNCTION	TX(49MHz)	YANG H J	SUN J W		1 OF 1
	DWG NO	DZ04-00E003-02	20040601	20040602		

PDF created with FinePrint pdfFactory trial version http://www.fineprint.com