ATTACHMENT D.
FCC ID : QD8CFF
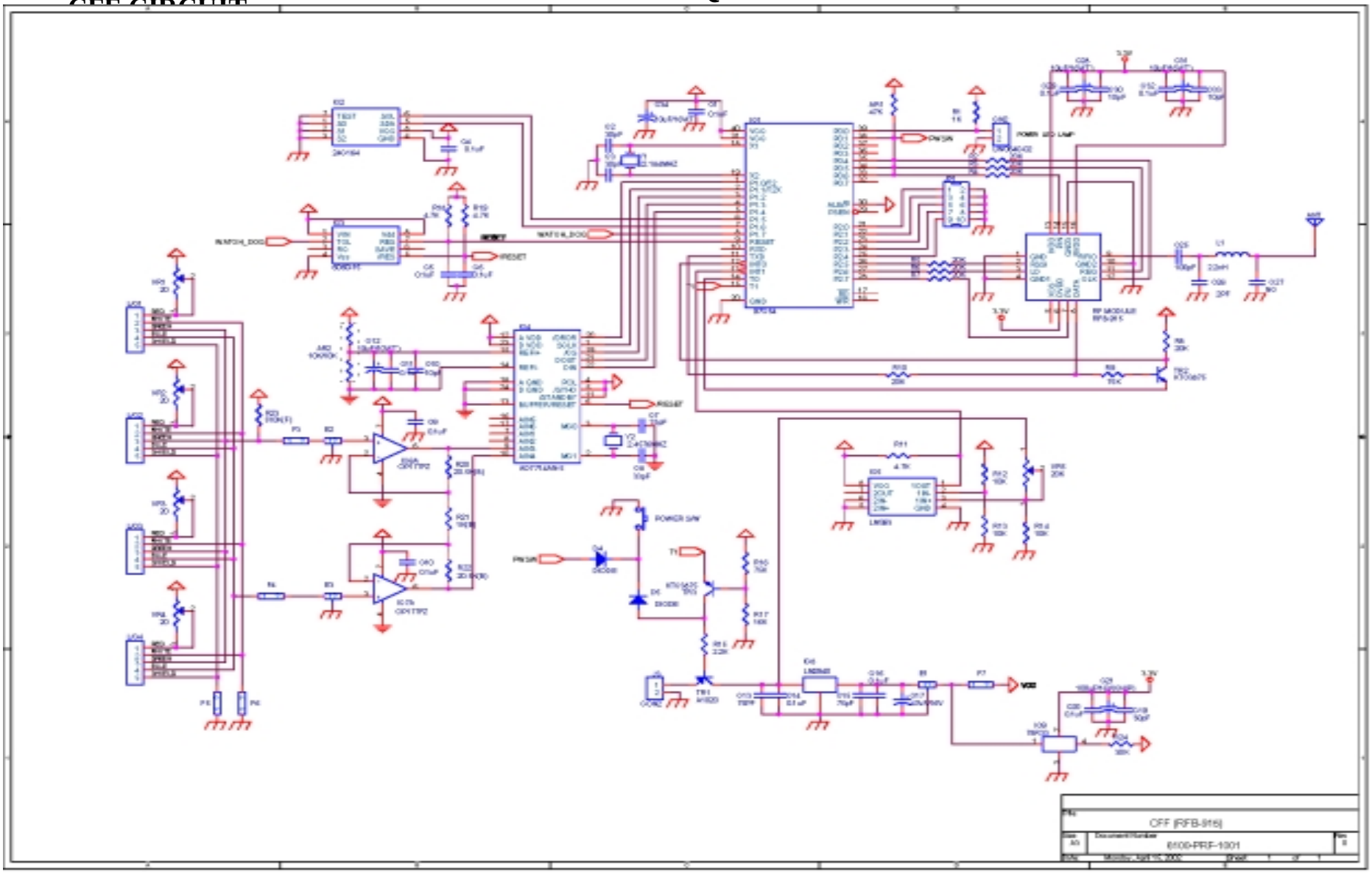
CFF CIRCUIT