Test Report No.:
FCC2022-0020-RF4

RF Test Report

EUT	:	**ActivPanel 9 WiFi and Bluetooth Module**
MODEL	:	**AP9-WIFIBT-AB-02**
BRAND NAME	:	**Promethean**
APPLICANT	:	**Promethean Limited**
Classification Of Test	:	**N/A**

CVC Testing Technology Co., Ltd.

Client	**Name : Promethean Limited** **Address : Promethean House,Lower Philips Rd,whitebirk Industrial Estate,Blackburn,Bb1 5th United Kingdom**
Manufacturer	**Name : Promethean Limited** **Address : Promethean House,Lower Philips Rd,whitebirk Industrial Estate,Blackburn,Bb1 5th United Kingdom**
Equipment Under Test	**Name :ActivPanel 9 WiFi and Bluetooth Module** **Model/Type: AP9-WIFIBT-AB-02** **Trade mark :Promethean** **SerialNO.:N/A** **Sampe NO.:3-1**

Date of Receipt.	**2022.03.25**	Date of Testing	**2022.03.25～2022.05.24**

Test Specification	**Test Result**
FCC Part 15, Subpart E, Section 15.407 **Canada RSS-247 Issue 2 (2017-02)** **Canada RSS-Gen Issue 5 (2019-03)**	PASS

Evaluation of Test Result	The equipment under test was found to comply with the requirements of the standards applied. **Issue Date: 2022.05.25**

Tested by: Xu Zhenfei **Xu ZhenFei** Name Signature	Reviewed by: Liu yonghai **Liu YongHai** Name Signature	Approved by: **Chen HuaWen** Name Signature

Other Aspects: NONE.

Abbreviations:OK, Pass= passed Fail = failed N/A= not applicable EUT= equipment, sample(s) under tested

This test report relates only to the EUT, and shall not be reproduced except in full, without written approval of CVC.

TABLE OF CONTENTS

1 SUMMARY OF TEST RESULTS 5

1.1 LIST OF TEST AND MEASUREMENT INSTRUMENTS 6
1.2 TEST LOCATION 6

2 GENERAL INFORMATION 7

2.1 GENERAL PRODUCT INFORMATION 7
2.2 TEST MODE APPLICABILITY AND TESTED CHANNEL DETAIL 7
2.3 DESCRIPTION OF SUPPORT UNITS 8

3 REQUIREMENTS AND PARAMETERS FOR DFS TEST 9

3.1 APPLICABILITY OF DFS REQUIREMENTS 9
3.2 DETECTION THRESHOLD VALUES 10
3.3 DFS RESPONSE REQUIREMENT VALUES 10
3.4 PARAMETERS OF DFS TEST SIGNALS 11

4 TEST RESULTS 12

4.1 TEST SETUP OF DFS 12
4.2 DFS DETECTION THRESHOLD 13
4.3 CHANNEL LOADING 14
4.4 CHANNEL CLOSING TRANSMISSION AND CHANNEL MOVE TIME 15
4.5 NON- OCCUPANCY PERIOD 16

5 PHOTOGRAPHS OF THE EUT 18

RELEASE CONTROL RECORD

ISSUE NO.	REASON FOR CHANGE	DATE ISSUED
FCC2022-0020-RF4	Original release	2022.05.25

1 SUMMARY OF TEST RESULTS

The EUT has been tested according to the following specifications:

FCC STANDARD SECTION	TEST TYPE AND LIMIT	RESULT	REMARK
15.407 RSS-247 clause 6.3	Channel Move TIme	PASS	0.989 sec
15.407 RSS-247 clause 6.3	Channel Closing Transmission Time	PASS	200+aggregate of 18.2ms over remaining 10s period.
15.407 RSS-247 clause 6.3	Non-Occupancy Period and Client Beacon Test	PASS	⩾30 min

Note: Since the product is client without radar detection function, only Channel Move Time, Channel Closing Transmission Time and Non-Occupancy Period and Client Beacon Test are required ro be performed

1.1 LIST OF TEST AND MEASUREMENT INSTRUMENTS

Test Equipment	Type/Mode	SERIAL NO.	Equipment No.	Manufacturer	Cal. Due
WIFI & Bluetooth Test System 1					/
Communication Shielded Room 1	4m*3m*3m	CRTDSWKSR44301	VGDS-0699	CRT	2024/04/24
Spectrum Analyzer	FSV30	104337	DZ-000235	R&S	2022/11/03
Comprehensive Test Instrument	CMW500	137779	DZ-000220	R&S	2022/06/30
Comprehensive Test Instrument	CMW500	169888	DZ-000342	R&S	2022/12/01
LTE Comprehensive Test Instrument	E7515A	MY58010639	DZ-000173	KEYSIGHT	2022/04/14
Analog Signal Generator	SMA100B	103663	DZ-000239-2	R&S	2022/06/30
Vector Signal Generator	SMBV100B	101757	DZ-000239-1	R&S	2022/06/30
Programmable DC Power Supply	E3642A	MY59108106	DZ-000242-2	KEYSIGHT	2022/08/05

1.2 TEST LOCATION

The tests and measurements refer to this report were performed by EMC testing Lab. of CVC Testing Technology Co., Ltd.

Address: No.3,TiantaiyiRoad,KaitaiAvenue,ScienceCity,Guangzhou,China
Post Code：510663 Tel：020-32293888
FAX：020-32293889 E-mail：office@cvc.org.cn

2 GENERAL INFORMATION

2.1 GENERAL PRODUCT INFORMATION

PRODUCT	ActivPanel 9 WiFi and Bluetooth Module
BRAND	Promethean
MODEL	AP9-WIFIBT-AB-02
ADDITIONAL MODEL	N/A
FCC ID	QAM023
IC ID	5459A-023
POWER SUPPLY	DC 5V From USB Host Unit
OPERATING FREQUENCY	5260MHz ~ 5320MHz, 5500MHz ~ 5720MHz (Remark 4)
ANTENNA TYPE	ANT0: External Antenna, 4.4dBi Gain for 5260MHz ~ 5320MHz External Antenna, 3.0dBi Gain for 5500MHz ~ 5700MHz ANT1: External Antenna, 4.4dBi Gain for 5260MHz ~ 5320MHz External Antenna, 3.0dBi Gain for 5500MHz ~ 5700MHz
I/O PORTS	Refer to user's manual
CABLE SUPPLIED	N/A

Remark:

1. For more detailed features description, please refer to the manufacturer's specifications or the User's Manual.
2. For the test results, the EUT had been tested with all conditions. But only the worst case was shown in test report.
3. EUT photo refer to report (Report NO.: FCC2022-0020-E).
4. RSS-247 For the band 5600-5650 MHz, no operation is permitted. Until further notice, devices subject to this annex shall not be capable of transmitting in the band 5600-5650 MHz. This restriction is for the protection of Environment Canada weather radars operating in this band.

2.2 TEST MODE APPLICABILITY AND TESTED CHANNEL DETAIL

BANDWIDTH	CHANNEL	TEST TYPE AND LIMIT
80MHz	CH58	Channel Move TIme
		Channel Closing Transmission Time
		Non-Occupancy Period and Client Beacon Test

This test was investigated for different bandwidth (20MHz, 40MHz and 80MHz). The following plots was done on 80MHz as a representative

2.3 DESCRIPTION OF SUPPORT UNITS

The EUT has been tested as an independent unit together with other necessary accessories or support units. The following support units or accessories were used to form a representative test configuration during the tests.

Support Equipment					
NO	Description	Brand	Model No.	FCC ID	Supplied by
1	Wireless router	LINKSYS	WRT3200ACM	Q87-WRT3200ACM	Lab

Support Cable							
NO	Description	Quantity (Number)	Length (m)	Detachable (Yes/ No)	Shielded (Yes/ No)	Cores (Number)	Supplied by
1	N/A	N/A	N/A	N/A	N/A	N/A	N/A

3 REQUIREMENTS AND PARAMETERS FOR DFS TEST

3.1 APPLICABILITY OF DFS REQUIREMENTS

APPLICABILITY OF DFS REQUIREMENTS PRIOR TO USE A CHANNEL

REQUIREMENT	OPERATIONAL MODE		
	MASTER	CLIENT WITHOUT RADAR DETECTION	CLIENT WITH RADAR DETECTION
Non-Occupancy Period	✓	✓	✓
DFS Detection Threshold	✓	Not required	✓
Channel Availability Check Time	✓	Not required	Not required
Uniform Spreading	✓	Not required	Not required
U-NII Detection Bandwidth	✓	Not required	✓

APPLICABILITY OF DFS REQUIREMENTS DURING NORMAL OPERATION

REQUIREMENT	OPERATIONAL MODE		
	MASTER	CLIENT WITHOUT RADAR DETECTION	CLIENT WITH RADAR DETECTION
DFS Detection Threshold	✓	Not required	✓
Channel Closing Transmission Time	✓	✓	✓
Channel Move Time	✓	✓	✓
U-NII Detection Bandwidth	✓	Not required	✓

3.2 DETECTION THRESHOLD VALUES

DFS DETECTION THRESHOLDS FOR MASTER DEVICES AND CLIENT DEVICES WITH RADAR DETECTION

MAXIMUM TRANSMIT POWER	VALUE (SEE Note 1 and 2)
≥ 200 milliwatt	-64 dBm
< 200 milliwatt	-62 dBm

Note 1: This is the level at the input of the receiver assuming a 0 dBi receive antenna.
Note 2: Throughout these test procedures an additional 1 dB has been added to the amplitude of the test transmission waveforms to account for variations in measurement equipment. This will ensure that the test signal is at or above the detection threshold level to trigger a DFS response.

3.3 DFS Response Requirement Values

PARAMETER	VALUE
Non-occupancy period	Minimum 30 minutes
Channel Availability Check Time	60 seconds
Channel Move Time	10 seconds See Note 1.
Channel Closing Transmission Time	200 milliseconds + an aggregate of 60 milliseconds over remaining 10 second period. See Notes 1 and 2.
U-NII Detection Bandwidth	100% of the UNII transmission power bandwidth. See Note 3.

Note 1: The instant that the Channel Move Time and the Channel Closing Transmission Time begins is as follows:
• For the Short Pulse Radar Test Signals this instant is the end of the Burst.
• For the Frequency Hopping radar Test Signal, this instant is the end of the last radar Burst generated.
• For the Long Pulse Radar Test Signal this instant is the end of the 12 second period defining the Radar Waveform.
Note 2: The Channel Closing Transmission Time is comprised of 200 milliseconds starting at the beginning of the Channel Move Time plus any additional intermittent control signals required to facilitate a Channel move (an aggregate of 60 milliseconds) during the remainder of the 10 second period. The aggregate duration of control signals will not count quiet periods in between transmissions.
Note 3: During the U-NII Detection Bandwidth detection test, radar type 1 is used and for each frequency step the minimum percentage of detection is 90 percent. Measurements are performed with no data traffic.

3.4 PARAMETERS OF DFS TEST SIGNALS

Step intervals of 0.1 microsecond for Pulse Width, 1 microsecond for PRI, 1 MHz for chirp width and 1 for the number of pulses will be utilized for the random determination of specific test waveforms.

Short Pulse Radar Test Waveforms

Radar Type	Pulse Width (µsec)	PRI (µsec)	Number of Pulses	Minimum Percentage of Successful Detection	Minimum Number of Trials
0	1	1428	18	See Note 1	See Note 1
1	1	Test A Test B	$\text{Roundup}\left\{\left(\frac{1}{360}\right)\cdot\left(\frac{19\cdot 10^6}{PRI_{\mu sec}}\right)\right\}$	60%	30
2	1-5	150-230	23-29	60%	30
3	6-10	200-500	16-18	60%	30
4	11-20	200-500	12-16	60%	30
Aggregate (Radar Types 1-4)				80%	120
Note 1: Short Pulse Radar Type 0 should be used for the detection bandwidth test, channel move time, and channel closing time tests.					

LONG PULSE RADAR TEST WAVEFORM

RADAR TYPE	PULSE WIDTH (µsec)	CHIRP WIDTH (MHz)	PRI (µsec)	NUMBER OF PULSES PER BURST	NUMBER OF BURSTS	MINIMUM PERCENTAGE OF SUCCESSFUL DETECTION	MINIMUM NUMBER OF TRIALS
5	50-100	5-20	1000-2000	1-3	8-20	80%	30

FREQUENCY HOPPING RADAR TEST WAVEFORM

RADAR TYPE	PULSE WIDTH (µsec)	PRI (µsec)	PULSES PER HOP	HOPPING RATE (kHz)	HOPPING SEQUENCE LENGTH (msec)	MINIMUM PERCENTAGE OF SUCCESSFUL DETECTION	MINIMUM NUMBER OF TRIALS
6	1	333	9	0.333	300	70%	30

4 TEST RESULTS

4.1 Test Setup of DFS

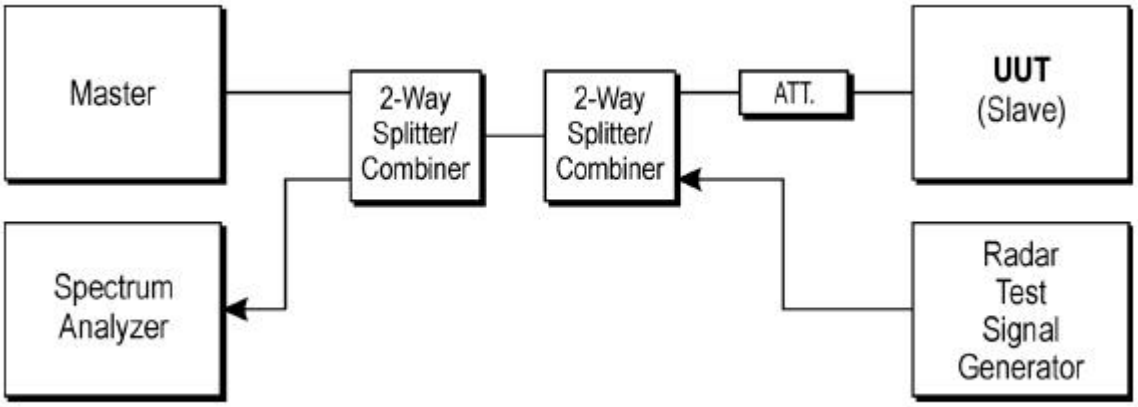

4.2 DFS Detection Threshold

The Required detection threshold is -59.05.00dBm = -64 +4.95dBi. The conducted radar burst level is set to -59.39dBm.

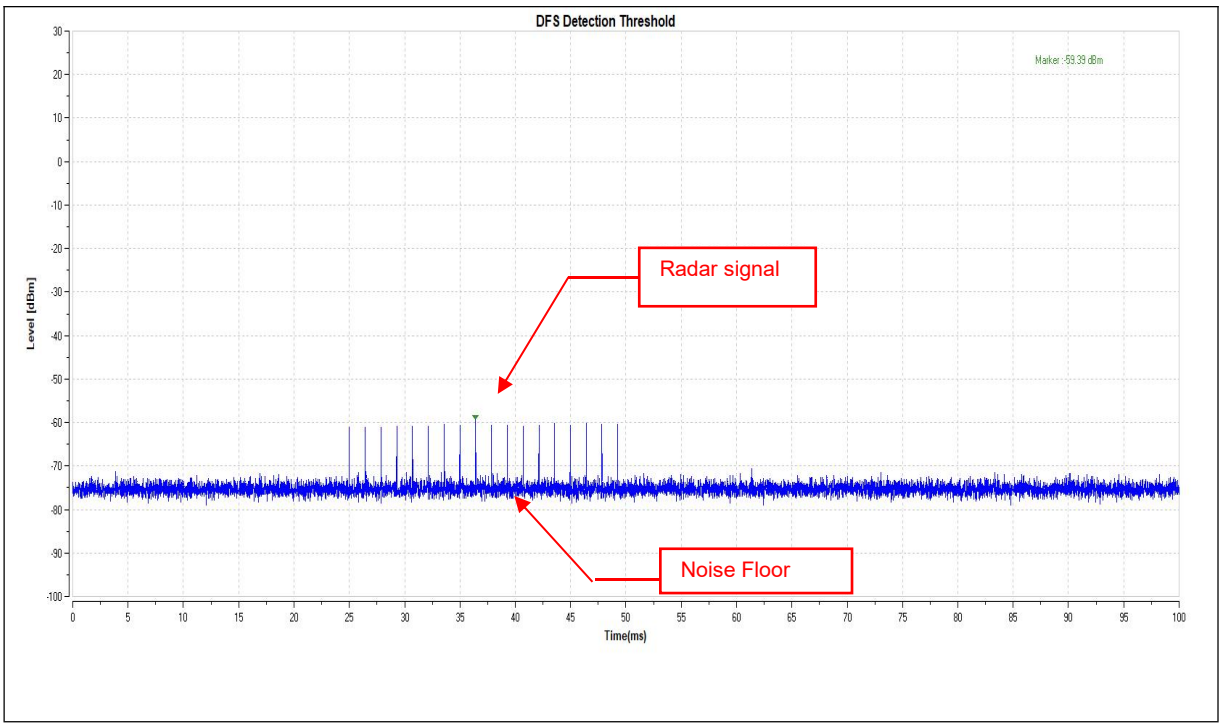

4.3 Channel loading

The radar signal was the same as transmitted channels, and injected into the antenna port of AP (master) with radar signal, measured the channel shutdown. The slave transmitted the test data to master, the transmitted duty cycle is 20.413%.

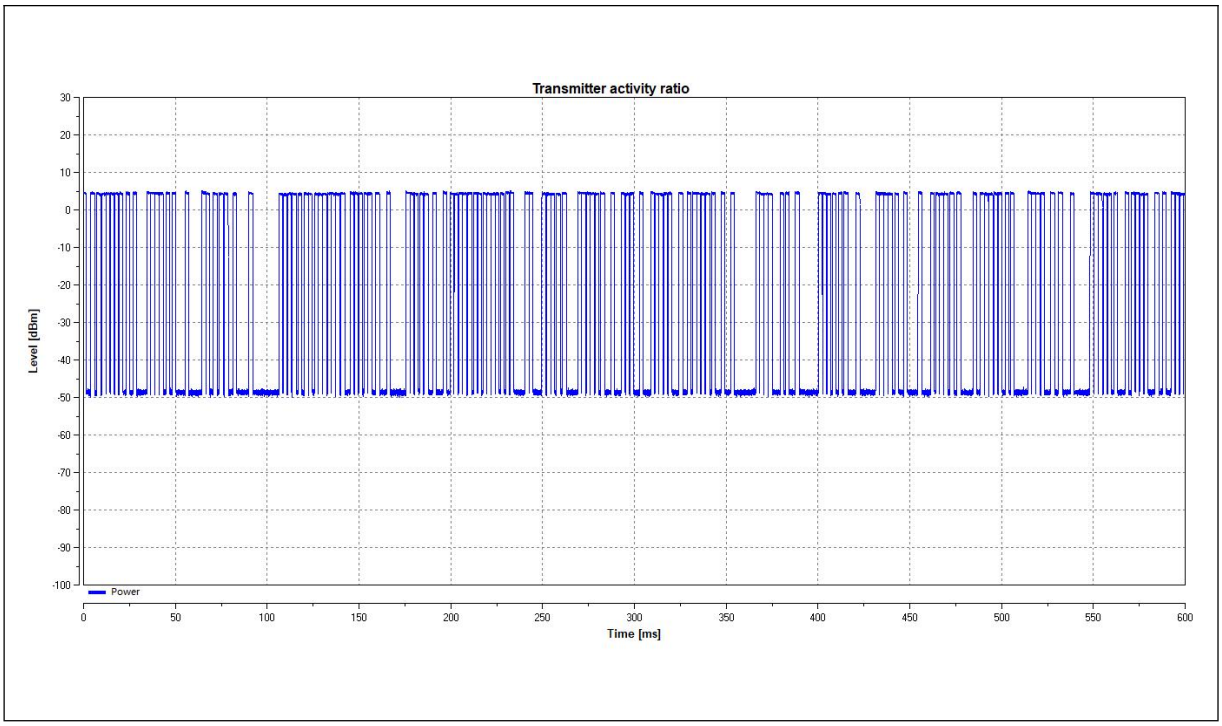

Note: Traffic signal: from slave transmit to master.

4.4 Channel Closing Transmission and Channel Move Time

Radar Signal 0

Channel Move Time(s)	0.989	Channel Closing Transmission Time(ms)	200+18.2

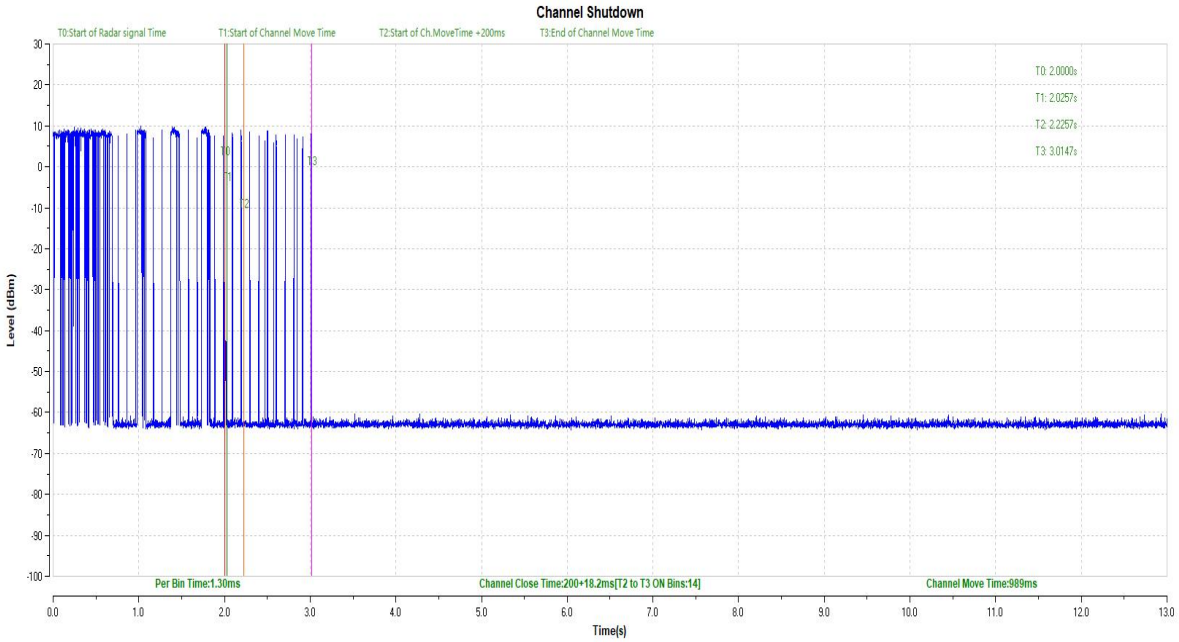

NOTE:

1.T0 denotes the Start of Rader Singnl Time.
2.T1 denotes the Start of Channel Move Time.
3.T2 denotes the Start of Channel Move Time + 200ms.
4.T3 denotes the End of Channel Move Time.
5.Per Bin Time = Sweep time (13000ms) / Sweep Point Bins (10000)
6.Channel Closing Transmission Time(200 + 18.2ms) = 200+ ON Bins* Per Bin Time

4.5 Non- Occupancy Period

1) Test results demonstrating an associated client link is established with the master on a test frequency
2) The client and DFS-certified master device are associated, and system testing will be performed with channel-loading for a non-occupancy period test.
3). The device transmits one type of radar as specified in the DFS Order.
4) The test frequency has been monitored to ensure no transmission of any type has occurred for 30 minutes;
Note: If the client moves with the master, the device is considered compliant if nothing appears in the client non-occupancy period test. For devices that shut down (rather than moving channels), no beacons should appear;
5)An analyzer plot that contains a single 30-minute sweep on the original test frequency.

NON- OCCUPANCY PERIOD

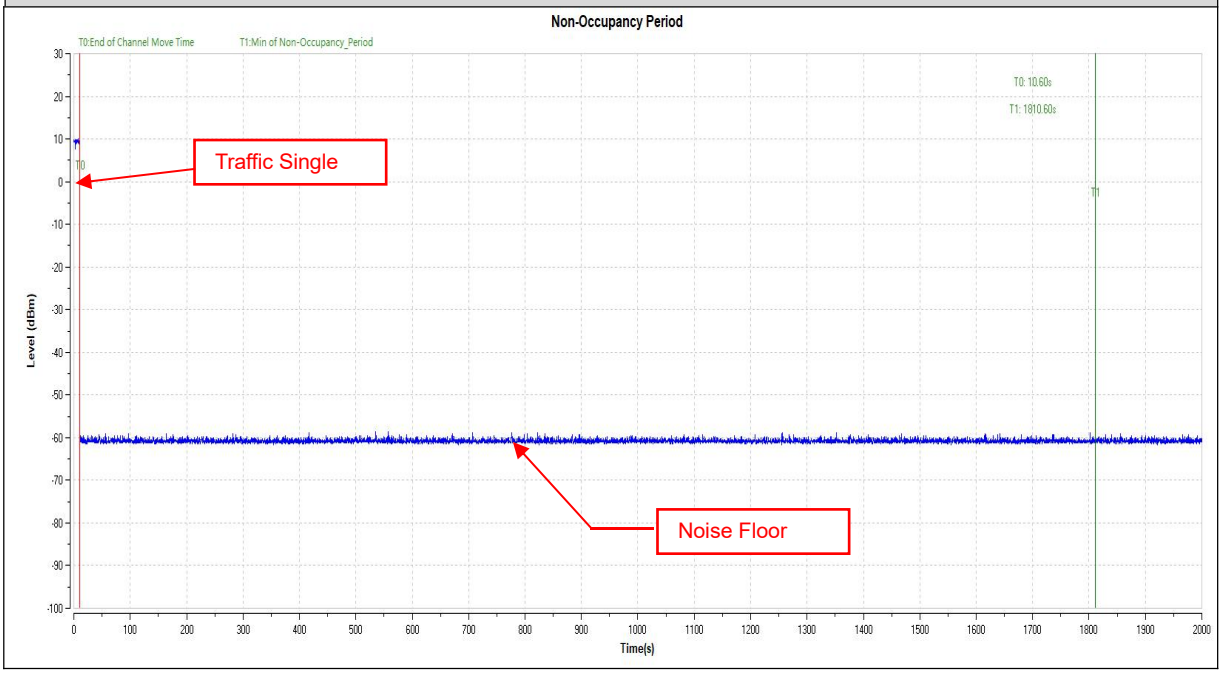

Master was off.
During the 30 minutes observation time, The UUT did not make any transmissions in the DFS band after UUT power up

NON-ASSOCIATED TEST

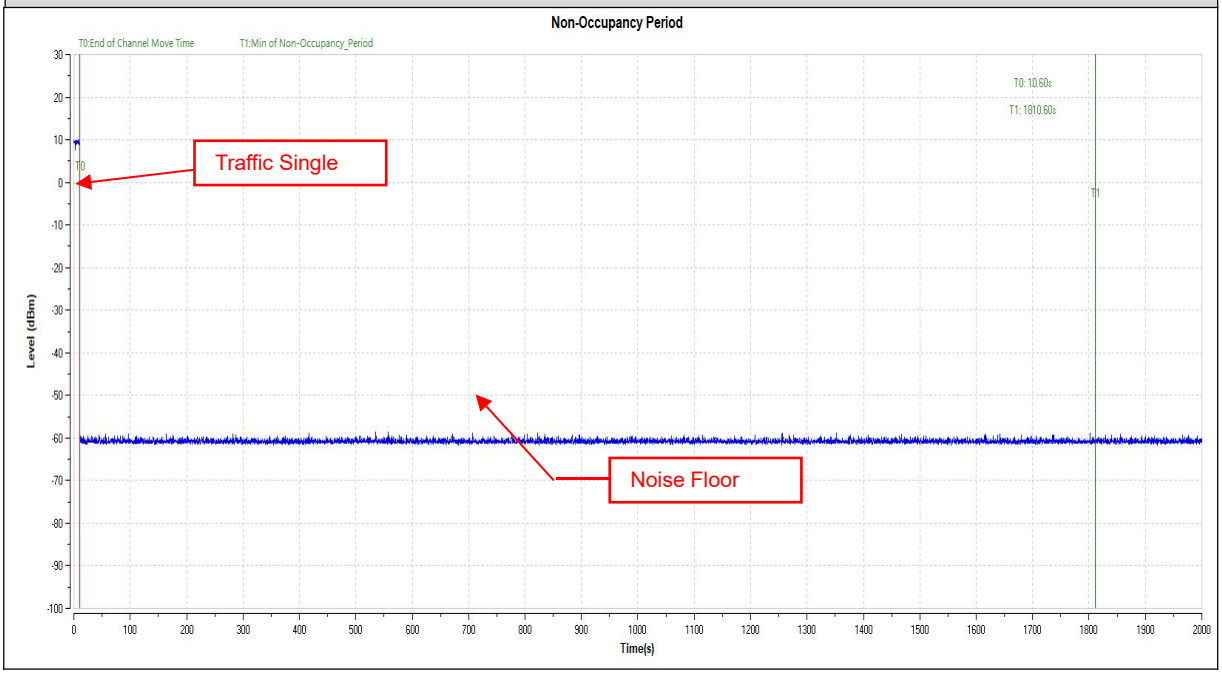

5 PHOTOGRAPHS OF THE EUT

Please refer to the attached file (External Photos report and Internal Photos).

Important

(1) The test report is valid with the official seal of the laboratory and the signatures of Test engineer, Author and Reviewer simultaneously.

(2) The test report is invalid if altered.

(3) Any photocopies or part photocopies in the test report are forbidden without the written permission from the laboratory.

(4) Objections to the test report must be submitted to the laboratory within 15 days.

(5) Generally, commission test is responsible for the tested samples only.

Address of the laboratory:

CVC Testing Technology Co., Ltd.

Address: No.3,TiantaiyiRoad,KaitaiAvenue,ScienceCity,Guangzhou,China

Post Code：510663 Tel：020-32293888

FAX：020-32293889 E-mail：office@cvc.org.cn