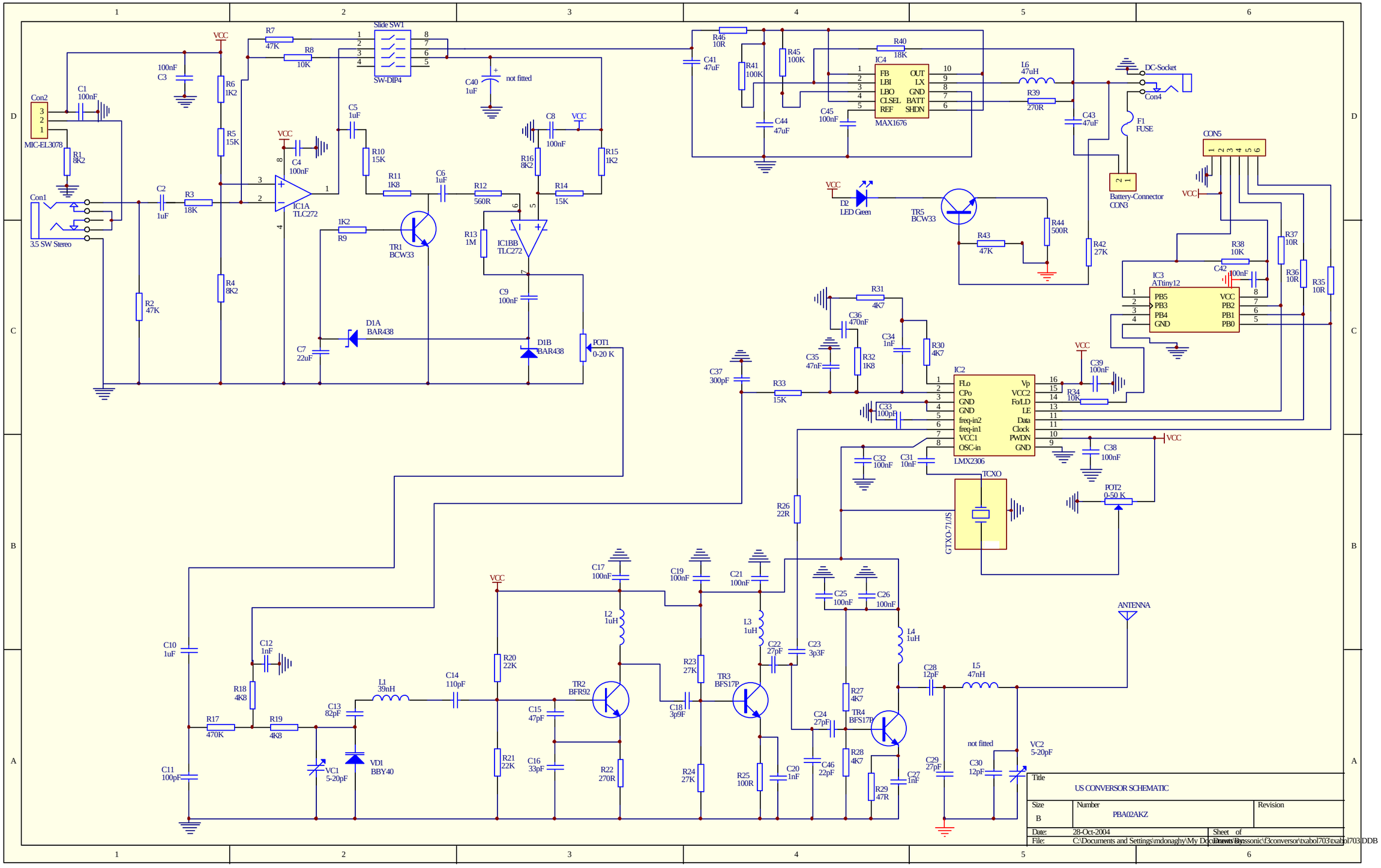
Title
US CONVERSOR SCHEMATIC
Size
B
Number
PBA02AKZ
Revision
Date: 28-Oct-2004
Sheet of
File: C:\Documents and Settings\mdonaghy\My Documents\Panasonic\f3conversor\txabol703\txabol703.DDB
Drawn By:
Con2
MIC-EL3078
Con1
3.5 SW Stereo
Slide SW1
SW-DIP4
not fitted
IC1A
TLC272
IC1BB
TLC272
TR1
BCW33
D1A
BAR438
D1B
BAR438
POT1
0-20 K
IC4
MAX1676
DC-Socket
Con4
F1
FUSE
Battery-Connector
CON3
CON5
D2
LED Green
TR5
BCW33
IC3
ATtiny12
IC2
LMX2306
TCXO
GTXO-71/JS
POT2
0-50 K
ANTENNA
TR2
BFR92
TR3
BFS17P
TR4
BFS17P
VD1
BBY40
VC1
5-20pF
VC2
5-20pF
not fitted